DAESAN® CE

INSTRUCTION MANUAL

<LEVER HOIST>

MODEL : NDM08 , NDM15 , NDM20 , NDM30 , NDM60 , NDM90 , NDM120

⚠ WARNING

This equipment should not be installed, operated or maintained by any person who has not read and understood all the contents of this manual. Failure to read and comply with the contents of this manual can result in serious bodily injury or death, and/or property damage.

DAESAN®

SAFE OPERATING PRACTICES

It is the responsibility of the owner/user to install, inspect, test, maintain, and operate these Lever hoists in accordance with any applicable national and local codes and standard.

These general instructions deal with the normal installation, operation and maintenance situations encountered with the Lever hoists described herein. The instructions should not be interpreted to anticipate every possible contingency or to anticipate the final system or configuration that uses these Lever hoists. Read and observe the instructions stated in the manual furnished with equipment to be used with these Lever hoists.

If the lever hoist owner/user requires additional information, or if any information in these instructions is not clear, contact DAESAN INOTEC, KOREA or the distributor of lever hoist. Do not install inspect, test, maintain, or operate this lever hoist unless this information is fully understood. These instructions include information for a variety of Lever hoists. Therefore, all instructions and information may not apply to one specific lever hoist. Disregard those portions of the instructions that do not apply.

This manually lever-operated chain hoist is designed to lift and lower a load by using manual force, and hold it by using the braking device under normal working conditions not intended to transport a person.

The cautions in handling the unit are classified into two levels in this manual;

⚠ **WARNING**	Warning indicates an imminently hazardous situation which if not avoided, could result in death or serious injury and property damage when the products are improperly used.
⚠ **CAUTION**	Caution indicates a potentially hazardous situation which, if not avoided, may result minor or moderate injury or property damage when the products are improperly used.

Even the matters indicated "⚠" may bring a serious result depending on the situation. Strictly observe both the notices as they contain very important matters.

1. General

⚠ WARNING

- The unit should be operated only by those who are familiar with the manual and contents of the instructing label.
- DO NOT lift more than rated load.
- DO NOT stay under a suspended load.
- DO NOT operate the lever hoist when somebody stays in an area where a suspended load is moved.
- DO NOT lift or move loads over people.
- DO NOT operate a damaged or malfunctioning hoist.
- DO NOT use a lever hoist with twisted, kinked, damaged, severely worn, deformed, or elongated load chains.
- DO NOT operate hoist with lever extension on lever handle
- DO NOT make modification to the lever hoist and its accessories.
- DO NOT disassemble the lever hoist or change the slip clutch setting.

※When the Slip Clutch adjustment is required, the said mechanism should be completely exchanged.

2. Installation and Setting-up

⚠ WARNING

- Inspection before operation and periodic inspection must be by all means carried out.
- The installation work should be performed only by the specialized contractor or experienced technicians.
- Make sure that a location on which the lever hoist is installed has a sufficient strength.
- Check and verify that structure or other equipment that will support the lever hoist has a rated load capacity greater than the rated load capacity of the lever hoist to be used. The support structure on which the hoist unit is installed is to bear loads more than 4times the rated load.
- Fix loads firmly on the bed of truck by the lever hoist and observe the relating laws and regulations in your country on driving along a road.

※When the adjustment is required, the said mechanism should be completely exchanged.

⚠ CAUTION

- The lever hoist should not be installed in places where it is exposed to rain or water.
- Risks of overheating of the braking system during prolonged lowering of loads.
- Forbidden use of equipment in a specific environment(explosive, corrosive, etc.)

3. Operation and Handling

⚠ WARNING

- Do not get on a suspended load and do not use the lever hoist to lift, support or transport persons.
- Do not allow your attention to be diverted from operating the lever hoist
- Do not use the lever hoist for the earth lifting (for example, lifting objects fixed under the ground).
- Turn over of a suspended load should be done only by the experienced operator.
- Make sure before operation that the lever properly functions.
- Do not operate the lever hoist when the lever is in disorder.
- Make sure before operating the lever hoist that the brake properly functions.
- Do not operate the lever hoist when the brake is in disorder.
- Do not apply the electric welding on a suspended load.
- Do not allow the load chain to be used as a ground for welding.
- Do not allow the load chain to be touched by a live welding electrode.
- DO not operate beyond the limits of the load chain travel.

⚠ CAUTION

- Do not use the lever hoist with a damaged safety latch of the hook.
- Do not use the lever hoist with name plates and labels attached to the body removed or left unclear.
- Operate the lever hoist only by means of a manual pulling force (of the operator).
- Do not throw away or drag the lever hoist.
- Do not lift or suspend loads with multiple hoists.
- Always keep the hoist body and the load chain clean so that dust, sands and the like will not be deposited on them.
- Make sure that the range of lift of the lever hoist is sufficient for the intended work.

4. Maintenance and Inspection

⚠ WARNING

- DO NOT use parts other than genuine ones supplied from the manufacturer.
- Never do shortening or lengthening of the load chain.
- Only specialists authorized by the employer may carry out the maintenance,inspection or repair.
- Carry out the maintenance, inspection or repair with the lever hoist unloaded (e.g. without loads).
- When any disorder is found in the maintenance or inspection, immediately make repair before re-operating the lever hoist.

※ The overload protection mechanism should be adjusted only by the manufacturer. (Equipped with slip clutch option)

⚠ WARNING

- Whenever carrying out the maintenance, inspection or repair, prepare a warning indication for “Under working” ("Under Inspection”, etc.).

5. Warning Label

Notice:

Inspections requiring dismantling and assembling of the unit should be carried out only by authorized technicians or dealers of our products.

6. Technical information

ITEM CODE

NDM **000**

Model

Capacity

08 = 0.8Ton
15 = 1.5Ton
20 = 2Ton
30 = 3Ton
60 = 6Ton
90 = 9Ton
120 = 12Ton

• Options : Overload protection by slip clutch system.

OPERATING CONDITIONS AND ENVIRONMENT

• Temperature range : -40 °C to 60 °C

※Humidity : 100% or less, this is not on underwater device

HOIST SPECIFICATION AND DIMENSIONS

Model		NDM type						
		NDM08	NDM15	NDM20	NDM30	NDM60	NDM90	NDM120
Capacity(SWL)	ton	0.8t	1.5t	2t	3t	6t	9t	12t
Standard lift	meter	1.5	1.5	1.5	1.5	1.5	1.5	1.5
Chainfall	no.	1	1	1	1	2	3	4
Load chain dia.	mm	6.3x19.1	7.1x21.0	7.1x21.0	9.0x27.0	9.0x27.0	9.0x27.0	9.0x27.0
Net weight	kg	7	10.5	11	17.5	29	56	74
Pulling efforts	kg	30	30	40	37	38	39	40
Dimension	a	155.5	168.5	168.5	201	201	201	201
-	b	121	141.5	141.5	172.5	241	349	349
	c	329.5	379	395	465	615	775	880
	d	273	386	386	386	386	386	386
	e	102	107	107	117	117	117	117
	f	38	45	45	52	70	131	131
	g	25	28	30	38	46	57	79

PRODUCT DRAWING

NDM08
NDM15
NDM30

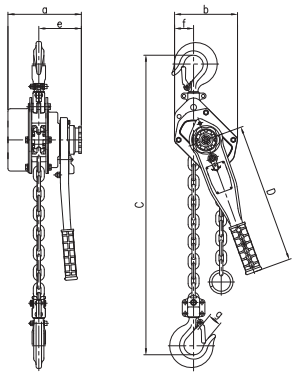

NDM60

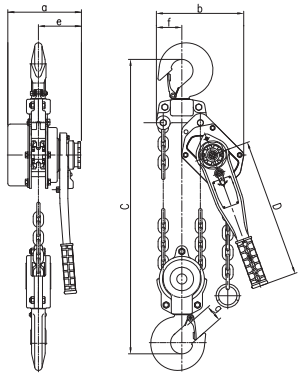

NDM90

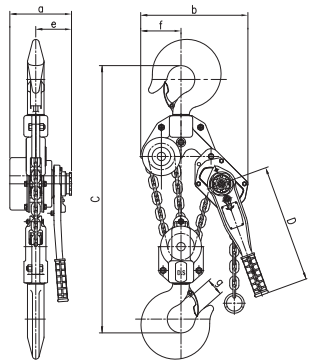

NDM120

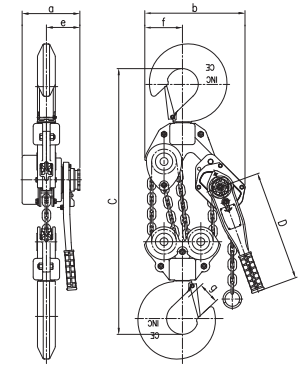

HOOK DIMENSIONS

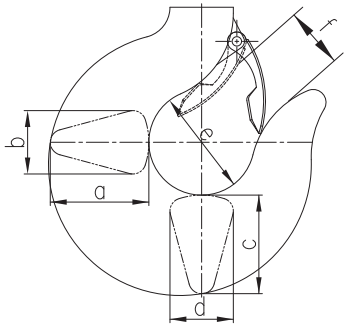

Cap. (Tons)	Product Code	a (mm)	b (mm)	c (mm)	d (mm)	e (mm)	f (mm)
0.8	**NDM08**	23	16	19	16	36	25
1.5	**NDM15**	33	22	29	22	43	28
2	**NDM20**	36	24	32	24	47	30
3	**NDM30**	39	28	35	28	53	38
6	**NDM60**	55	38	46	38	61	46
9	**NDM90**	86	54	86	54	90	57
12	**NDM120**	100	62	86	62	110	79

7. Hoist Operation

⚠ WARNING

- The unit should be operated by persons only who have fully understood the manual and instruction labels must be on the unit.

FREE CHAIN PRINCIPLE

Adjusting the length of the load chain

1.The length of the load chain can be adjusted with the free chaining mechanism as the following pricture show.

Free chaining allows load chain to be moved freely on either direction because the brake is released under no load situations.

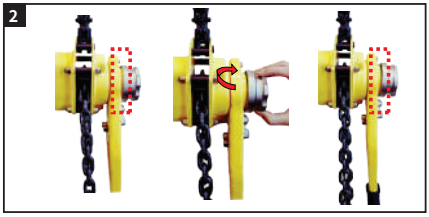

Pulling the grip ring actuates the internal spring to release the mechanical brakes allowing load chain to be pulled in either direction to the desired length.Neutral Position (free chaining) completed

Load chain length can be adjusted by pulling it in either direction.

Set the change lever to the UP position.

Turn the grip ring counter clockwise. Free chaining mode is terminated.

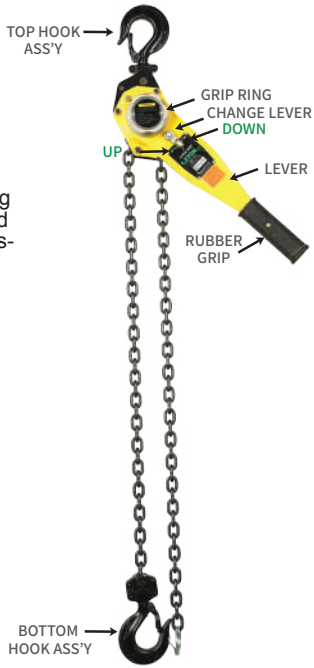

- After the manipulations (4) and (5) have been carried out, the bottom hook can be lifted up by operating the operation handle.

- If the load chain is loose and lifting is impossible, manipulate the operation handle while gently holding it. The load chain will be tightened.

⚠ DANGER

- DO NOT operate the grip ring while a load is applied to the hoist.
- DO NOT touch the grip ring during lifting or lowering of the load.
- Always check the change lever is placed in the proper position.

⚠ CAUTION

- Do not pull the load chain suddenly in free chain mode. Excessive pulling may set the brake and not allow the load chain to move. If this occur hoist must be reset.
- To reset the hoist to operate, rotate the grip ring clockwise while lightly pulling on the load side chain. Once slack is removed the grip ring snaps in. This resets the brake and allows the hoist to be operated with lever handle.

8. Grip Ring Operation

To tighten the load chain which is a little loose, set the change lever to the UP position to turn the grip ring clockwise. By this manipulation, the load chain will be quickly tensioned.

⚠ CAUTION

- Co-hoisting by more than 2 sets of lever hoists may be very risky depending on installing and using them.
- Pay attention to balancing of a load as stated below;
- When a combination of 2 lever hoists with different capacities is used, make sure that the hoist with a smaller capacity is not severely loaded.
- When a load is lifted parallel by a number of lever hoists, make sure that the load is not unevenly carried by them.
- When a number of lever hoists are used in a lengthwise row, select hoists with an equal rated load.
- Combination of hoists with different capacities will be very risky when a hoist with bigger capacity is operated.
- Use wire ropes, clips, shackles, fitting pieces etc. which are sufficiently strong for slinging the top and bottom hooks of the lever hoist.
- When it is used as an additional hoist for a big crane, select a lever hoist with a bigger capacity than the actual load. Furthermore, do not operate the crane in a manner of so-called earth-lifting. Otherwise, the lever hoist will be damaged.
- When a number of lever hoists are used or one is used in combination with other machines, do not overload the lever hoist. Use the chain lever hoist in a well balanced condition, making sure the safety.

CAUTIONS DURING OPERATION

9. Dangerous Operation

⚠ WARNING

- Never apply a load beyond the rated load to the unit (over-loading).
- DO NOT perform over-lifting or overpowering.
- DO NOT give a shock to the lever hoist.
- DO NOT get on a load to be lifted and do not allow anybody to stay under a load lifted.
- DO NOT use a lever hoist which is not in order.

※ Do not use the lever hoist in incorrect manners as shown below, which are quite dangerous.

1) Never allow overload.

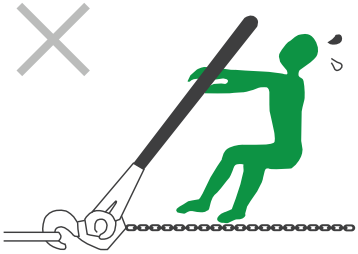

a) The load can be normally wound up or moved merely by operating the handle by one hand.

b) Do not operate hoist with lever extensions.

c) If excessive force is required to hoist or pull the load, stop the operation at once.The load may exceed the rated load, causing overload, or the unit is over-lifted or over-lowered.

2) Avoid excessive lifting and lowering.

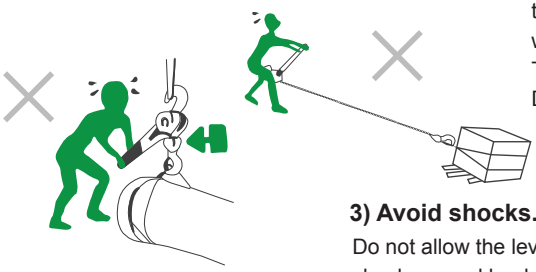

Winding-up the bottom hook beyond the limit is referred to as “over-lifing” and winding-down beyond the limit is “over-lowering”. These operations may damage the lever hoist. Do not attempt such operation in any circumstances.

3) Avoid shocks.

Do not allow the lever hoist to absorb any shock caused by dropping a load even when drop height is insignificant, if the shock is intensive, it may cause a serious danger even when the load is light.

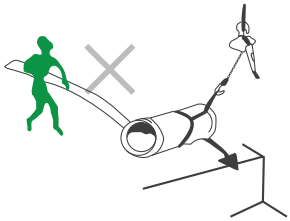

4) Do not mount or stand under any lifted load.

5) The grip made from rubber may be pulled out.

The rubber may be deteriorated depending on conditions used and thus be easily pulled out of the handle.

Never suspend yourself from the handle, giving your full weight to the unit.

6) Others

• In no cases, use a defective lever hoist.

• Always handle the lever hoist with care. Never throw it down from any height.

MAINTENANCE AND INSPECTION DAILY INSPECTION

- For daily operation, be sure to carry out the following checks prior to operation.
- When any abnormality is found, stop operating the lever hoist and take proper counter-measures in accordance with “the measures when abnormalities are found”.
- When a trouble cannot be solved, contact our authorized dealer.

※Do not make continuous running under abnormal conditions, as it is very dangerous and may lead to a severe accident.

10. Check items

1) Visual appearance for any deformation of missing parts.

a) The top hook attached to the main body must not be deformed.

b) Bolt, nut, washer and split pin which fix the load chain to the hook assembly must be properly fitted.

c) The top and bottom hooks must be normal in shape, and free of flaw with normal opening, and the safety latch must be normal.

d) The load chain must be oiled and free of any remarkable flaw like damage deformation or wear.

e) The end ring should be fitted to the first link from the end of load chain not equipped with the bottom hook.

f) The end ring should not be deformed in excess of the limits shown in the sketch.

2) Check that the Change Lever properly function, by actually moving it.

3) Check that the pawl normally rattles when the change lever is set to the NEUTRAL position and the grip ring is turned in the clockwise direction.

4) Verify that the load chain is not twisted or tangled prior to operating the hoist. Make sure the bottom hook (6T,9T,12T) with multiple fall hoists is not capsized. Correct all chain irregularities before conducting the first hoist operation.

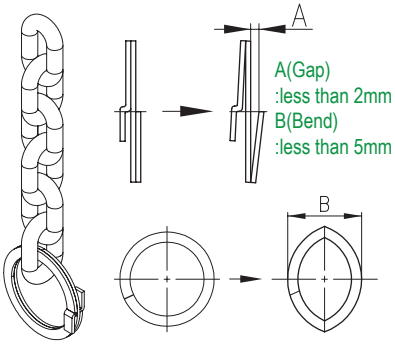

11. Measures when abnormalities are found

• In case that parts are simply missing and any dismantling work is not required, the unit can be operated again by mounting genuine parts on it. When the end ring is deformed or lubrication for the load chain is required the unit can be also operated by exchanging the end ring with new one and by lubricating the load chain respectively.
Make sure that the brake functions normally when the lever hoist is again used after the-completed remedy.

The storage location

Wipe mud and water off the surface of the unit after it is used, and apply oil to the load chain and the neck of hooks as well as the axle of idle sheave (Models 6t , 9t , 12t)

Transport

■ Do not drag or throw the hoist when carrying it.

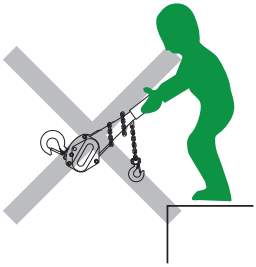

PERIODIC CHECKING

In case of troubles and/or any abnormality, stop operating the hoisting unit and consult a dealer of our products. It may happen that the load chain and the hooks fall in a dangerous state even if they show no remarkable changes in their function.
It is therefore indispensable to make a periodic measuring check.
The periodic inspection should be normally made once a month. Observe the following “INSPECTION AND LIMITATION FOR USE”.

MAINTENANCE AND INSPECTION

⚠ WARNING

- Do not use parts and the lever hoist over the limit of use.
- In carrying out the daily and periodic inspections, if any wearing parts are found in excess of the standard limit of use, they should be replaced for sure.
- It is very dangerous to use parts over the standard limit of use.

12. Inspection of Load chain and its lifetime

Check the load chain not partly but for the whole length in a careful manner.
For checking the elongation, measure the inner length of 11 links, that is, the sum of 11 pitches with a vernier caliper as the following sketch shows. It is normally sufficient to check the links in a distance of every 30 cm but check them by making the measuring distance shorter when the elongation of the chain is close to the limitation for use so that none of them should exceed the limit for use.
Scrap the load chain which is found to have one or several links of which wire diameter has been reduced to 95 % or less (the smallest value should be measured) of the initial wire diameter due to worn connecting portion of links or flaws.
• Welded portion of the chain link shows a flaw bigger than 0.5 mm in depth.
• The chain link has been deformed.
• The chain link has been exposed to a high temperature, as it shows, for example, welding spatters.
Scrap load chains which show any one of the 3 faults as mentioned above.

GUIDE FOR LOAD CHAIN REPLACEMENT

Rated load	CHAIN WIRE DIAMETER(mm)		PITCH(PX11) (mm)	
	Standard value	Limit for use(10%)	Standard value	Limit for use(5%)
0.8T	FCDØ6.3	Ø5.67	209	219.5
1.5T	FCDØ7.1	Ø6.39	231	242.6
2T	FVØ7.1	Ø6.39	231	242.6
3,6,9,12T	FCDØ9	Ø8.1	297	311.8

13. Inspection of hook and its lifetime

(common items to both the top and bottom hooks)

The opening of hook becomes wider when the load much exceeding the rated load is hung or a heavy load is applied on the tip of it. Hooks with such a widened opening as the sketches cannot keep the required strength nor shock absorbing power as specified, and thus hooks having reached the dimension for exchange (A' in the table below) should be replaced with new ones. It is very dangerous to use such hooks with widened opening again after heating and remedy. Be sure to scrap them and replace them with new ones. Periodically check the portion of the hook contacting with sling tools for its wear and replace the hook having reached the dimension for exchange (B' in the table below) with, a new one. Hooks showing either of following faults should be also scrapped;

• It has a flaw of 1 mm or more in depth.

• It has a deformation such as bending and the like (to be visually noticed).

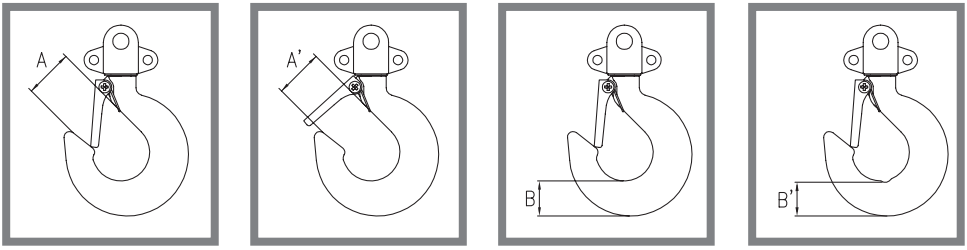

GUIDE FOR HOOK REPLACEMENT

Rated load	Dimension A (mm)		Dimension B (mm)	
	Standard value(A)	Limit for use(A')	Standard value(B)	Limit for use(B')
0.8T	30	33	19	17.5
1.5T	35	38.5	29	26.7
2T	38	41.8	32	29.4
3T	44	48.5	35	32.2
6T	50	55	46	42.3
9T	67	73.7	86	79.1
12T	90	99	86	79.1

14. Mounting of free chaining mechanism

1. Check that the collar (13-00) is mounted onto the pinion shaft (27-00). (Fig. 1)

2. Set the change lever to the UP position and turn the change gear (12-05) clockwise several times to get rid of a brake gap. Do not operate handle while doing it.

3. Insert the return spring (33-01) into the device as Fig. 3 shows.

Fig.1

Fig.2

Fig.3

4. Place the grip ring (32-00) onto the collar and the pinion shaft (27-00) and contact one projection of grip ring on its back side with the return spring (33-01). Then turn the grip ring anti-clockwise and turn a bit clockwise when the said projection falls through first and second steps of the change gear (12-05).

Note: The grip ring should not reach the first step of the feed gear.

5. Insert the spring (33-00) into the grip ring.

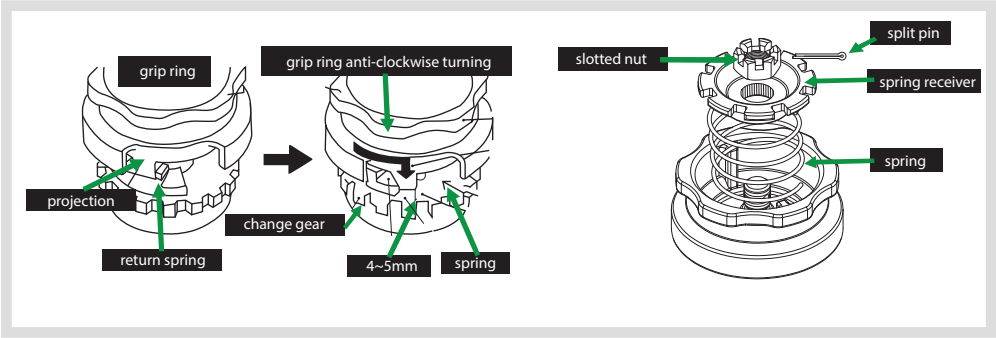

Fig.4

6. Place the spring receiver (20-00) with its inner serration of the pinion shaft (27-00) and insert the convex portions of the grip ring into the concave portion of the spring receiver while aiming at the position where they mate each other simultaneously.

7. Tighten the slotted nut(42-00) firmly onto the thread of the pinion shaft while holding the spring receiver.

8. It shows that free chaining mode has been correctly installed when the load chain rattles and wound up by actuating the operation handle. If the load chain cannot be wound up, the free chaining mode has not correctly been set. In this case carry out 3 through 8 again

CHECKING CHAIN LEVER HOISTS

⚠ WARNING

The following shall be observed in using the lever hoist

(1) The lever hoist should not be used to lift a load exceeding the rated load except for testing purpose.

(2) DO NOT use a load chain other than ones provided from manufacturer.

(3) DO NOT operate the lever hoist in such a manner as a sudden load is applied to it.

(4) DO NOT use the lever hoist of which range of lift is not sufficient for the work.

(5) DO NOT use hooks which are not equipped with a safety latch or of which latch has no safety effect.

(6) DO NOT use a load chain which is not equipped with a chain stopper.

(7) DO NOT wind the load chain directly around a load.

(8) DO NOT hang a load on the tip of the hook.

(9) DO NOT operate hoist with lever extension on lever handle.

(10) DO NOT operate the lever handle by foot.

(11) DO NOT perform over-lifting and over-lowering.

(12) DO NOT walk below a suspended load.

(13) Never use the free chaining mode with a load suspended.

(14) DO NOT leave the lever hoist for many hours with a load suspended.
If such a handling cannot be avoided, set the change lever trigger to the position of "UP" and fix the operation lever to the load chain bearing the load by means of a rope.

(15) Before operation, check the load chain for twisting or tangling.
The lever hoist can be used only after such twisting and tangling is corrected.

(16) When the lever hoist is used in special conditions such as lower or higher temperatures, or corrosive atmosphere, etc., consult us before use.

(17) The lever hoist should not be modified by the users. If any modification is required it should be done by us.

⚠ CAUTION

(18) Make routine inspection before use and carry out a periodic inspection.
(19) Immediately stop operating the chain lever hoist when an abnormally big hand force is required.
(20) Do not drop the chain lever hoist from a higher place.
(21) Apply a lubricant to the load chain before use.
(22) Use the chain lever hoist, applying lubricants to its gears, bearings, and points which are liable to wear.
(23) The chain lever hoist should be applied with anti rust to be kept unused for a long period.
(24) Consult us whenever any special usage of the chain lever hoist is required.

15. Lever Hoist Inspection

Preoperational Inspection need to be performed visually before the first use of each shift. Daily and frequent Inspection should be performed according to Hoist Inspection Method Criteria below especially hoist with heavy and severe service with frequent operation. Hoist that are used infrequently and idle for more than 1 month should be checked and inspected prior to its operation.When lever hoist is repaired, and make sure that it works in a normal state. Make sure to use genuine spare parts supplied from us.

Hoist Inspection Method Criteria

Item	Method	Criteria	Action
Lifting & Lowering operation mechanism	Visual, Auditory	Smooth ratchet sound must be heard in lifting Lifting and lowering operation should be smoothly carried out. Brake shows no abnormality in lowering	Repair or Replace as required
Braking System - Components	Visual	Pawl, Pawl spring and Pawl stud should not be deformed, scarred or show significant wear. Discs should be free of grease oil, scars, gouges and wear and have uniform thickness. Ratchet gear should be free from deformation and sever corrosion	Replace
Operating system - Components	Visual	Gears should be free from severe wear and breakage, Lever handle should be free from deformation, wear and crack and breakage. End ring must be attached to end of the load chain and should be free from deformation or wear	Replace
Hooks - Surface Condition	Visual	Should be free of nicks, gouges, dents, cracks, weld splatter and corrosion.	Replace

Item	Method	Criteria	Action
Hooks - Fretting wear	Measure	Dimension B should not be less than discard value in guide for hook replacement (page 16)	Replace
Hooks - Stretch	Measure	Dimension A should not be greater than than 1.1 times that measured and recorded at the time of purchase. Refer to guide for hook replacement (page 16)	Replace
Hooks - Deformation	Visual	Should be free of twists and deformations.	Replace
Hooks - Bent Shank or Neck	Visual	Shank and neck portions of hook should be free of deformation	Replace
Hook - Swivel	Visual, Function	Surfaces should not show significant wear and should be free of grime, dirt and deformation. Hook should rotate freely with no roughness.	Lubricate, clean or replace as required
Hooks - Idle Sheave (Multiple fall hoist)	Visual, Function	Pockets of Idle Sheave should be free of significant wear. Idle Sheave surfaces should be free of nicks, dirt gouges, and grime.	Lubricate, clean or replace as required
Hook - Safety Latches	Visual, Function	Safety Latch should not be deformed. Attachment of latch to hook should not be loose. Safety latch spring should not be missing and should not be weak. Safety latch movement should not be stiff. When depressed and released latch should snap smartly to its closed position	Replace
Hook - Top hook pin	Visual	Top hook pin should be free of scars or significant deformation	Replace
Load Chain - Surface Condition	Visual	Should be free of nicks, gouges, dents, weld splatter and corrosion. Chain links should not be deformed, and should not show signs of abrasion. Surface where chain links bear on one another should be free of siginifcant wear	Replace
Load Chain - Pitch and Wire Diameter	Measure	11 links dimension should not be greater than value listed in page 15. Diameter should not be less than value listed in page 16.	Replace Inspect load sheave and idle sheave for multiple fall hoists
Load Chain - Lubrication	Visual, Auditory	Entire surface of each chain link should be coated with lubricant and should be free of dirt and grime. Chain should not emit cracking noise when hoisting a load.	Clean and Lubricate
Load Chain - Reeving	Visual	Chain should reeved properly through load sheave. On multiple fall hoists chain should be installed properly and free of twists.	Reeve/install chain properly
Bolts, Nuts and Rivets	Visual, check with proper tool	Bolts, nuts and rivets should not be loose deformed or corroded.	Tighten or replace as required
Load Sheave and Idle Sheave	Visual	Pockets of load & Idle sheave should be clean and free of significant wear.	Replace
Warning Label	Visual	Warning Label should be affixed to the hoist and they should be legible	Replace
Hoist Capacity Label	Visual	Hoist capacity label should be legible and securely attached to the hoist	Replace

Lever Hoist with Overload protection

Features :

When the Lever Hoist is overload during lifting or load binding, the Overload protection device will cause the Operating handle to slip, and will prevent further force from being transferred to the Load chain.

The Overload protection device only functions in the hoisting direction, lowering will be possible even when the Lever Hoist is overloaded.

.

※ When overload protection is activated, select a larger capacity hoist, or consult a lifting specialist for another means of operation.

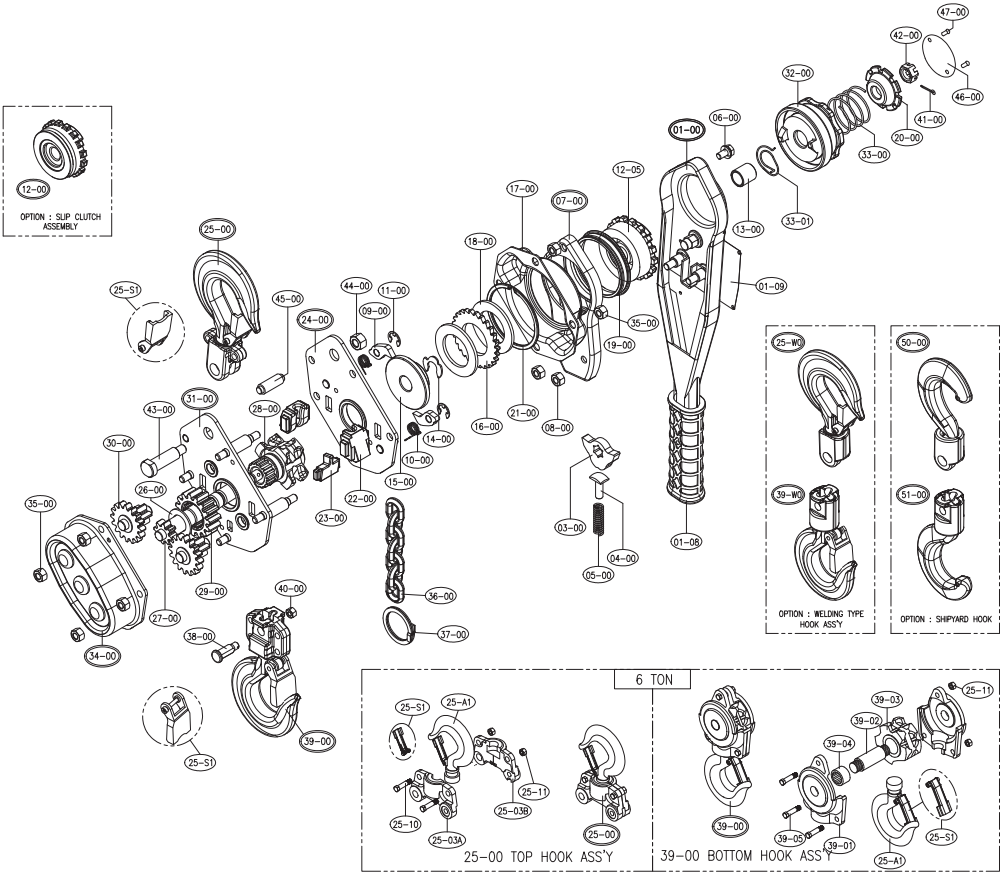
OPTION : SLIP CLUTCH ASSEMBLY
OPTION : WELDING TYPE HOOK ASS'Y
OPTION : SHIPYARD HOOK
6 TON
25-00 TOP HOOK ASS'Y
39-00 BOTTOM HOOK ASS'Y

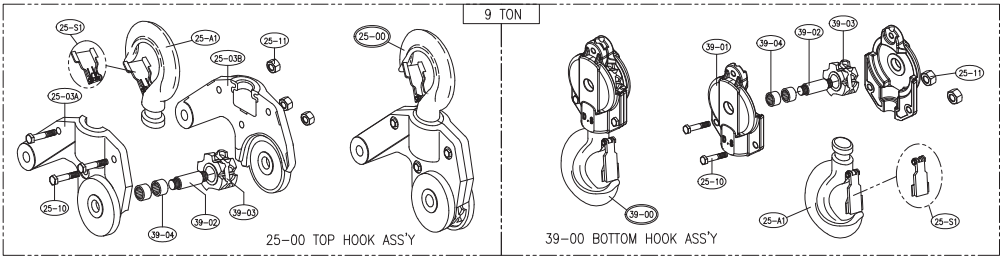
9 TON
25-00 TOP HOOK ASS'Y
39-00 BOTTOM HOOK ASS'Y

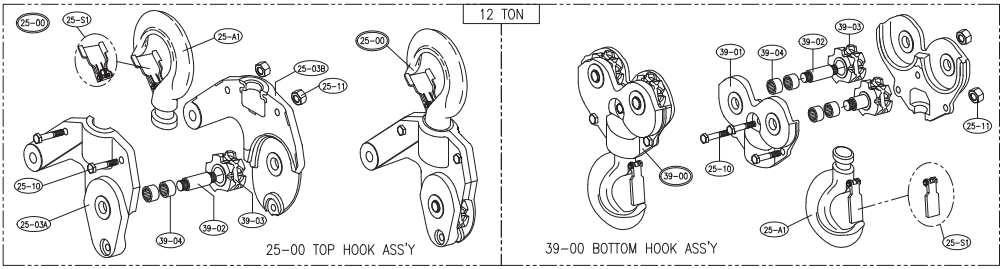
12 TON
25-00 TOP HOOK ASS'Y
39-00 BOTTOM HOOK ASS'Y

Item	Description	Quantity							Remark
		0.8T	1.5T	2T	3T	6T	9T	12T	
01-00	LEVER ASS'Y	1							
01-08	RUBBER GRIP	1							
01-09	NAME PLATE	1							
03-00	CHANGE PAWL	1							
04-00	PUSH PIN	1							
05-00	PUSH SPRING	1							
06-00	BOLT SPRING WASHER	1							
07-00	LEVER COVER ASS'Y	1							
08-00	U-NUT	2							
09-00	PAWL	2							
10-00	PAWL SPRING	2							
11-00	SNAP RING	2							
12-00	CLUTCH ASS'Y	1							OPTION
12-05	CHANGE GEAR	1							
13-00	COLLAR	1							
14-00	SNAP RING	1							
15-00	HUB	1							
16-00	RATCHET GEAR	1							
17-00	BRAKE COVER	1							
18-00	DISC	2							
19-00	COVER BUSH	1							
20-00	SPRING RECEIVER	1							
21-00	SNAP RING	1							
22-00	CHAIN GUIDE	2							
23-00	STRIPPER	1							
24-00	LEVER SIDE PLATE ASS'Y	1							
25-00	TOP HOOK ASS'Y	1			N/A	1			
25-W0	TOP HOOK ASS'Y (W)*	N/A	1			N/A			OPTION
25-A1	HOOK ASS'Y	N/A				2			
25-S1	SAFETY LATCH SET	2							
25-03A	TOP FRAME A	N/A				1			
25-03B	TOP FRAME B	N/A				1			
25-10	HEX BOLT	N/A				2	5		
25-11	HEX NUT	N/A				5			
26-00	PINION SHAFT WASHER	1							
27-00	PINION SHAFT	1							
28-00	LOAD SHEAVE	1							
29-00	1ST GEAR	1							
30-00	2ND GEAR & 3RD GEAR	2							
31-00	GEAR SIDE PLATE ASS'Y	1							
32-00	GRIP RING	1							
33-00	GRIP RING SPRING	1							
33-01	RETURN SPRING	1							
34-00	GEAR COVER ASS'Y	1							
35-00	U-NUT	8							
36-00	LOAD CHAIN	-							
37-00	END RING	1							
38-00	HOOK BOLT	1							
39-00	BOTTOM HOOK ASS'Y	1			N/A	1			
39-W0	BOTTOM HOOK ASS'Y (W)*	N/A	1			N/A			OPTION
39-01	BOTTOM FRAME	N/A				1			
39-02	AXLE	N/A				1	2	3	
39-03	SHEAVE	N/A				1	2	3	
39-04	NEEDLE BEARING	N/A				2	4	6	
39-05	HEX BOLT	N/A				3	N/A		
40-00	U-NUT	1							
41-00	COTTER PIN	1							
42-00	SLOTTED NUT	1							
43-00	TOP HOOK PIN	1							
44-00	U-NUT	1							
45-00	HANGER PIN	1							
46-00	GRIP RING COVER	1							
47-00	MACHINE SCREW	2							
50-00	SHIPYARD TOP HOOK	N/A	1			N/A			OPTION
51-00	SHIPYARD BOTTOM HOOK	N/A	1			N/A			OPTION

* WELDING TYPE HOOK ASSY.

DAESAN®

DAESAN®

'Lift your confidence'

DAESAN INOTEC INC.

www.daesaninotec.com

32-32 Jungahn-nonggongdanjigil, Jungahn-myun
Gongju-si, Chungcheongnam-do, South korea

TEL : +82(41)850-9700 / **FAX** :+82(41)-881-9701