MME-X-NC_230918
P_xxxxxx

DAESAN®

HAND CHAIN HOIST
DSN 1/2 - 40 TONS

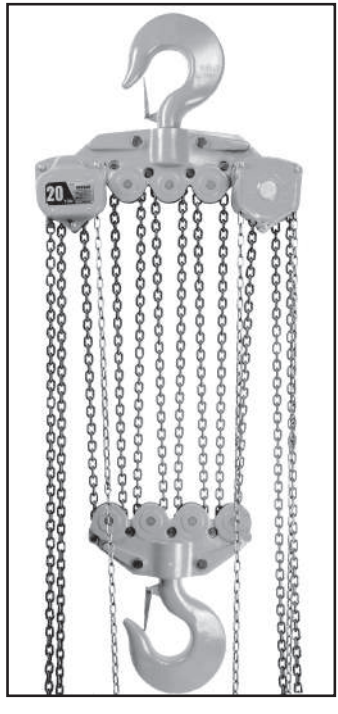

www.daesaninotec.com

DAESAN®

NOTICE

It is the responsibility of the owner/user to install, inspect, test, maintain, and operate these hand chain hoists in accordance with Standard for Overhead Hoists.

These general instructions deal with the normal installation, operation and maintenance situations encountered with the hand chain hoists described herein. The instructions should not be interpreted to anticipate every possible contingency or to anticipate the final system or configuration that uses these hand chain hoists. Read and observe the instructions stated in the manual furnished with equipment to be used with these hand chain hoists.

These instructions include information for a variety of hand chain hoists. Therefore, all instructions and information may not apply to one specific hand chain hoist. Disregard those portions of the instru ctions that do not apply.

If the hand chains hoist owner/user requires additional information, or if any information in these instr uctions is not clear, contact DAESAN INOTEC INC. Korea or the distributor of the hand chain hoist. Do not install, inspect, test, maintain, or operate this hand chain hoist unless this information is fully understood.

⚠ WARNING

This hand chain hoist should not be installed, operated, or maintained by any person who has not read all the contents of these instructions. Failure to read and comply with these instructions or any of the warnings or limitations noted herein can result in serious bodily injury or death, and/or property damage.

Only trained and qualified personnel shall operate and maintain this equipment.

Equipment described herein is not designed for, and should not be used for lifting, supporting, or transporting humans.

User should not use this hand chain hoist in conjunction with other equipment unless necessary and/or req uired safety devices applicable to the system are installed by the user.

Modifications to upgrade, rerate or otherwise alter these hand chain hoists shall be authorized only by the original equipment manufacturer or qualified professional engineer.

PRIOR TO INSTALLATION

Check for damage during shipment. Place claim with carrier if any damage is discovered. DO NOT install or use a damaged hand chain hoist.

Check and verify that structure or other equipment that will support the hand chain hoist has a rated load capacity equal to or greater than the rated load capacity of the hand chain hoist to be used.

OPERATION

Before initial operation of hoist :

1. Read and comply with all instructions and warnings furnished with or attached to hoist.
2. Check lubricant.
3. Check operation of brake.
4. Check that chain is properly seated in sheaves and that chain is not twisted, kinked, or damaged.

Before each shift:

1. Inspect hooks for nicks, gouges, cracks, and signs of pulling apart or twist.
2. Inspect hook latch for proper operation.
3. Check chain for kinks or twists.
4. Check operation of brake.
5. Replace warning label if missing or illegible.

Before operating :

1. Be certain all personnel are clear of the load to be lifted and moved.
2. Make sure load will clear stock piles, machinery, or other obstructions when hoisting and traveling the load.
3. Eliminate any twists or kinks in the load chain.

⚠ WARNING

SAFETY PRECAUTIONS

1. READ these instructions and Safety Standard for Overhead Hoists before installing, operating, or maintaining this equipment.
2. DO NOT lift more than rated load.
3. DO NOT operate hoist when it is restricted from forming a straight line with the direction of loading.
4. DO NOT operate with twisted, kinked, or damaged chain.
5. DO NOT operate if chain is not seated in sheaves or sprockets.
6. DO NOT wrap chain around load or use chain as a sling.
7. DO NOT operate unless load is properly applied to the saddle or bowl of the hook.
8. DO NOT operate if load is applied to the tip of the hook.
9. DO NOT operate with damaged or missing hook latches.
10. DO NOT lift people.
11. DO NOT lift or move loads over people.
12. DO NOT operate with side-pulling or side-loading of load to hoist.
13. DO NOT operate a damaged or malfunctioning hoist.
14. DO NOT operate with other than hand power.
15. DO NOT remove, deface, or obscure warning label or labels on hoist.
16. DO NOT leave load suspended when hoist is unattended unless specific precautions have been instituted and are in place.
17. DO NOT lengthen load chain or repair damaged load chain.
18. DO NOT use chain as a ground for welding.
19. WARN personnel of approaching loads.

FICURE 1

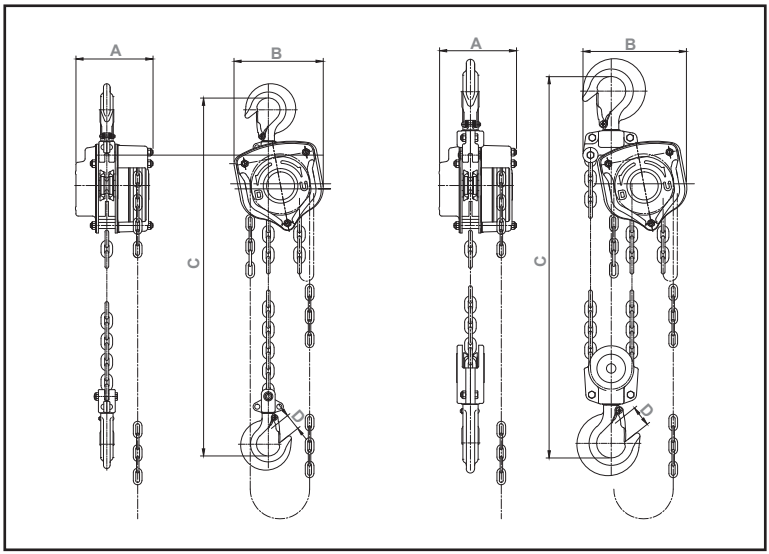

TABLE 1 - SPECIFICATION

MODEL NO :		DSN0.5	DSN1	DSN1.5	DSN2N	DSN2	DSN3	DSN5	DSN7.5	DSN10	DSN15	DSN20	DSN25	DSN30	DSN40
Capacity(SWL)	Ton	0.5	1	1.5	2	2	3	5	7.5	10	15	20	25	30	40
Chainfall	No.	1	1	1	2	1	2	2	3	4	6	8	10	12	16
Standard lift	m	2.5	2.5	2.5	3	3	3	3	3.5	3.5	3.5	3.5	3.5	3.5	3.5
Load chain dia.	mm	6.3 x 19.1	6.3 x 19.1	7.1 x 21.0	6.3 x 19.1	7.9 x 23.0	7.1 x 21.0	9.0 x 27.0	9.0 x 27.0	9.0 x 27.0	9.0 x 27.0	9.0 x 27.0	9.0 x 27.0	9.0 x 27.0	9.0 x 27.0
Hand chain	mm	5.0 x 22.8	5.0 x 22.8	5.0 x 22.8	5.0 x 22.8	5.0 x 22.8	5.0 x 22.8	5.0 x 22.8	5.0 x 22.8	5.0 x 22.8	5.0 x 22.8	5.0 x 22.8	5.0 x 22.8	5.0 x 22.8	5.0 x 22.8
Net weight	Kg	11	12	14	18	22	23	41	55	95	150	200	393	536	696
Pulling efforts	Kg	18	33	34	33	34	35	39	40	41	41 x 2	41 x 2	41 x 2	41 x 2	41 x 2
A (Dimension)	mm	147	147	147	150	184	147	185	185	185	212	212	388	426	502
B		145	145	164	179	187	206	258	367	367	745	873	798	798	798
C		310	330	360	430	380	480	620	720	820	850	970	1500	1870	1960
D		26	30	33	38	38	42	45	45	53	79	85	85	95	95

INSPECTION AND MAINTENANCE

Prior to initial use, all new, altered, and repaired hoists shall be inspected in accordance with Table 3. Thereafter, inspections shall be conducted at intervals shown in Table 2; and items to be inspected are indicated in Table 3 by F (Frequent) or P (Periodic).

TABLE 2 - FREQUENCY OF INSPECTION

SERVICE*	FREQUENT INSPECTION	PERIODIC INSPECTION
Normal	Monthly	Annually
Heavy	Weekly to Monthly	Semi-Annually
Severe	Daily to Weekly	Quarterly

FIGURE 2

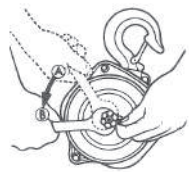

Frequent Inspections - Visual inspection by the operator or other authorized person. This inspection includes listening for unusual sounds while the hoist is operated that may indicate deficiencies.

Exception : Brakes require more than audio-visual inspection. Check daily by operating hoist with and without load, stopping at various positions to test holding power and amount of drift, if any occurs.

TO ADJUST BRAKE (Refer to Figure 2) :

1. Fully tighten nut to position A.
2. Slack off nut from position A to position B and insert adjusting spring.

NOTE : Replace brake disc if thickness is less than 2mm.

Periodic Inspections - Audio-visual inspection as for Frequent Inspections, with some disassembly to allow a more detailed inspection if external conditions indicate the need.

TABLE 3 - INSPECTION CHART

In chart, F indicates Frequent Inspection, P indicates Periodic Inspection

LOCATION	CHECK FOR	F	P	LOCATION	CHECK FOR	F	P
Braking mechanism (See Page 2)	Slipping under load	✓		Hook Retaining Members (Pins, Bolts, Nuts)	Not tight or secure		✓
	Hard to release	✓					
Brake Parts							
Brake Discs	Glazing		✓	Hook Latch	Damaged; does not close	✓	
	Oil contamination		✓	Suspension Members (Sheaves, hand-wheels, chain attachments, suspension bolts or pins)	Excessive wear		✓
Pawl; Ratchet	Excessive wear		✓		Distortion		✓
Pawl Spring	Corrosion; stretch		✓		Cracks	✓	✓
Load Chain (See Page 4)	Stretch		✓				
	Excessive wear	✓	✓				
	Twist	✓					
	Broken, cracked, or damaged links	✓					
	Deposits of foreign material	✓		Bearing; Shafts	Excessive wear		✓
					Distortion		✓
	Inadequate lubrication	✓			Cracks		✓
Hooks (See below)	Chemical damage	✓			Inadequate lubrication		✓
	Cracks	✓		Gears	Distortion		✓
	Deformation	✓			Broken or worn teeth		✓
	15% in exess of normal throat opening		✓		Cracks		✓
					Inadequate lubrication	✓	✓
	10° twist from plane of unbent hook		✓	Load Block; Suspension Hsg.	Distortion	✓	✓
					Cracks		✓
	Cracks (dye penetrant, magnetic particle, or other suitable detection method)		✓	Trolley; Supporting Structure	Possible inability to continue supporting imposed loads		✓
				Bolts, Nuts, Rivets	Not tight or secure		✓
				WARNING Label	Removed or illegible	✓	

HOOKS

Inspect hooks and measure hook throat opening at least once a month. Between regular inspections check visually daily for deformation, distortion, twisting, damage, and missing or damaged hook latches. Inspect as follows :

1. Measure hook throat opening from metal to metal of the hook as shown by dimension N in Figure 3. DO NOT measure from latch to metal. Hook must be replaced when throat opening measurement has increased 15% over the original throat opening dimension of a new hook, as follows:

FIGURE 3

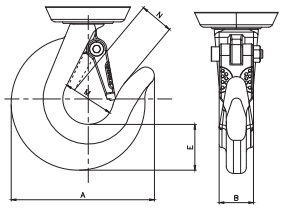

TABLE 4 - HOOK SPECIFICATION

Capacity	Standard Hook Dimension					For maintenance (replacement required)
	A	B	E	M	N	* maximum throat opening = N x 115%
	mm	mm	mm	mm	mm	
0.5ton	73	16	20	36	31	35.7
1ton	86	20.5	24	40	33.5	38.5
1.5ton	99	24	28.5	45.5	38	43.7
2ton	113	24	30	50	43	49.5
3ton	133	28	42	54	46	52.9
5ton	152	38	46	61	51	58.7
7.5ton	185	42	66	71	50	57.5
10ton	236	62	90	83	67	77
15ton	270	65	92	108	86	98.9
20ton	323	78	120	120	93	107
25ton	323	78	120	120	93	107
30ton	323	78	120	120	93	107
40ton	384	100	135	140	113	130

2. Measure hook depth at load bearing point (base, bowl, or saddle) of the hook. Hook must be replaced when wear at load bearing point is 10% of the original depth of the hook load bearing point.
3. A bend or twist of the hook exceeding 10° from the plane of the unbent hook requires replacement of the hook.
4. A hook latch, when required, that is missing shall be replaced.
5. A hook latch, when required, that is inoperative shall be repaired or replaced.
6. A hook with a hook latch that does not close the throat opening of the hook shall be removed from service or moused until the latch is replaced or repaired.
7. Hooks having damage from chemicals, corrosion, or deformation shall be repaired or replaced. Damage in the form of cracks, nicks, and gouges may be repaired by a designated person by grinding longitudinally, following the contour of the hook, provided no dimension of the hook is reduced by more than 10% of the original dimension of a new hook. If the repair reduces the dimension of the hook by more than 10% of the original dimension of a new hook, the hook shall be replaced.

NOTICE

ANY HOOK THAT REQUIRES REPLACEMENT BECAUSE OF EXCESSIVE BENDS, TWISTS, OR THROAT OPENING INDICATES ABUSE OR OVERLOADING OF THE HOIST. THEREFORE, OTHER LOAD-SUPPORTING COMPONENTS OF THE HOIST SHOULD BE INSPECTED FOR POSSIBLE DAMAGE WHEN SUCH CONDITIONS ARE FOUND.

⚠ CAUTION

NEVER REPAIR HOOKS BY WELDING OR RESHAPING. HEAT APPLIED TO THE HOOK WILL ALTER THE ORIGINAL HEAT TREATMENT OF THE HOOK MATERIAL AND REDUCE THE STRENGTH OF THE HOOK.

NEVER WELD HANDLES OR OTHER ATTACHMENTS TO THE HOOK. HEAT APPLIED TO THE HOOK WILL ALTER THE ORIGINAL HEAT TREATMENT OF THE HOOK MATERIAL AND REDUCE THE STRENGTH OF THE HOOK.

CHAIN

Inspect chain at least once a month. Between regular inspections, check visually daily for nicks gouges, weld splatter, corrosion,
or distorted links. Inspect chain thoroughly if it does not feed smoothly over load sheaves.
Inspect as follows:

1. Clean chain with solvent before inspection.
2. Test hoist with load and observe operation of chain over load sheaves.
3. Slacken chain and inspect contact points for excessive wear. Refer to Figure 3.
4. Using caliper-type gauge, measure outside length of 11 links under light tension. Refer to Figure 4. Replace chain if measurement exceeds maximum allowable gauge length as follows:

FIGURE 4

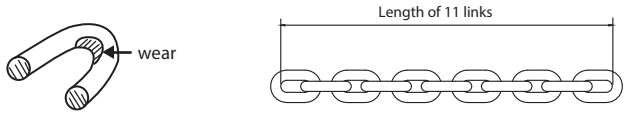

FIGURE 5

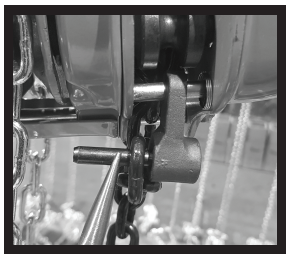

FIGURE 6

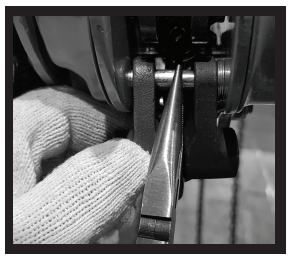

FIGURE 7

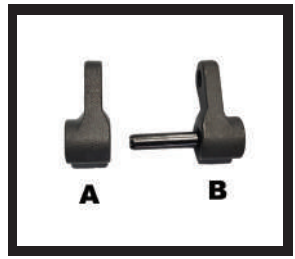

TABLE 5

CAPACITY TON	CHAIN WIRE DIAMETER mm	MAXIMUM ALLOWABLE GAUGE LENGTH
1/2	6.3	11 links = 228.8 mm
1	6.3	11 links = 228.8 mm
1.5	7.1	11 links = 251.9 mm
2	7.9	11 links = 276.3 mm
3	7.1	11 links = 251.9 mm
5	9.0	11 links = 323.8 mm
7.5	9.0	11 links = 323.8 mm
10	9.0	11 links = 323.8 mm
15	9.0	11 links = 323.8 mm
20	9.0	11 links = 323.8 mm
25	9.0	11 links = 323.8 mm
30	9.0	11 links = 323.8 mm
40	9.0	11 links = 323.8 mm

To install end anchor when replacing load chain:

1. Slip End Anchor Pin through end link of chain (Refer to Figure 5).
2. Assemble Part A of End Anchor to Part B (Refer to Figure 7).
3. Assemble End Anchor between Sideplates I and II.
   a. Insert End Pin through holes in End Anchor parts A and B.
   b. Eliminate any twist in chain.
   c. Insert end of End Pin into End Spring, and assemble into Sideplate I (Refer to Figure 6).
   d. Depress spring with pin until opposite end of pin will slide into hole in Sideplate I.
   e. Check that pin is securely fastened.

LUBRICATION

Apply NLGI No. 2 grease to gears as required.
Lubricate load chain with AGMA No. 2 oil.

Hand Chain Hoists with Overload protection

Features :

When the Hand Chain Hoist is overload during lifting or load binding, the Overload protection device will cause the Operating handle to slip, and will prevent further from being transferred to the Load chain.
The Overload protection device only functions in the hoisting direction, lowering will be possible even when the Hand Chain Hoist is overloaded.
.

※ When overload protection is activated, select a larger capacity hoist, or consult a lifting specialist for another means of operation.

CHAIN BLOCK EXPLODE VIEW

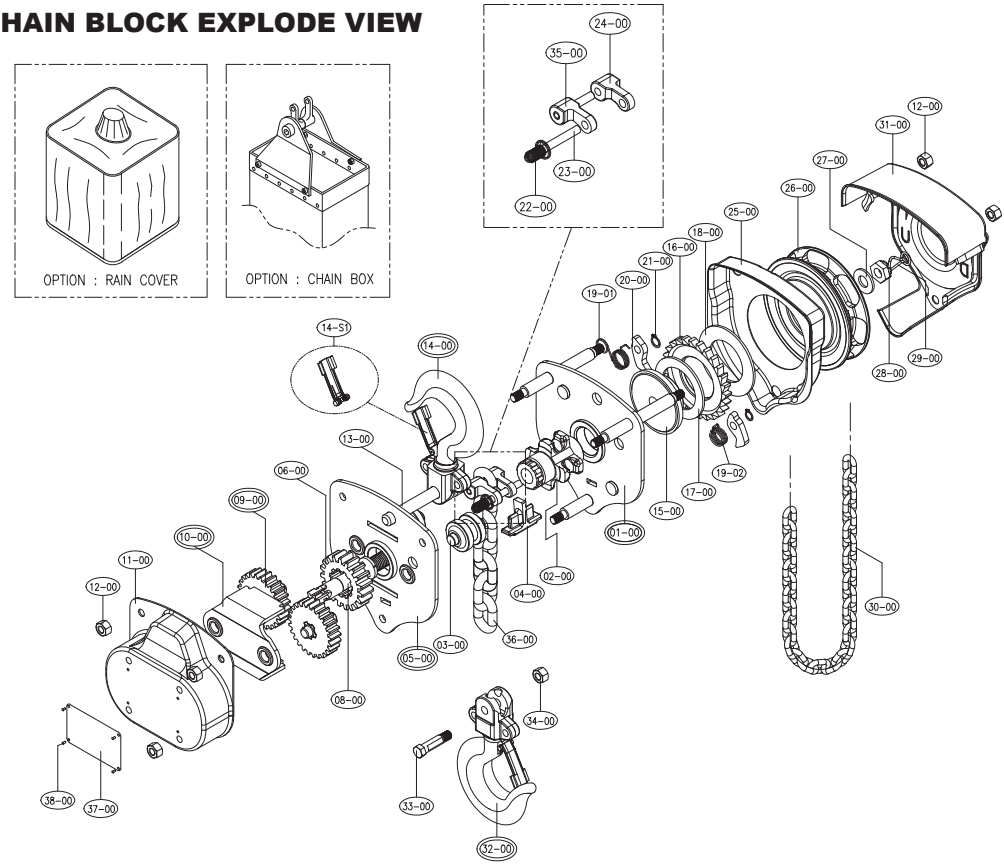

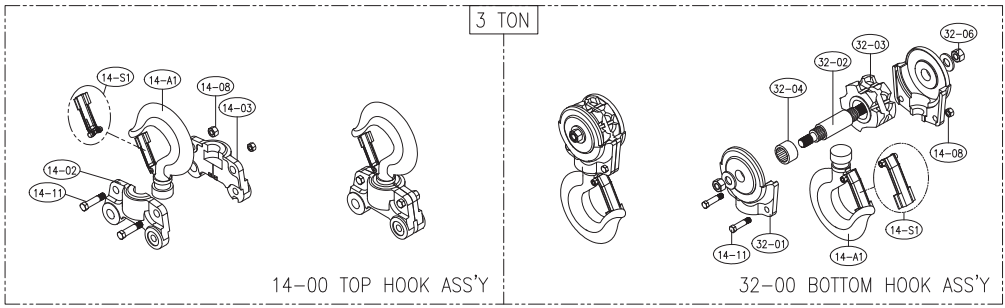

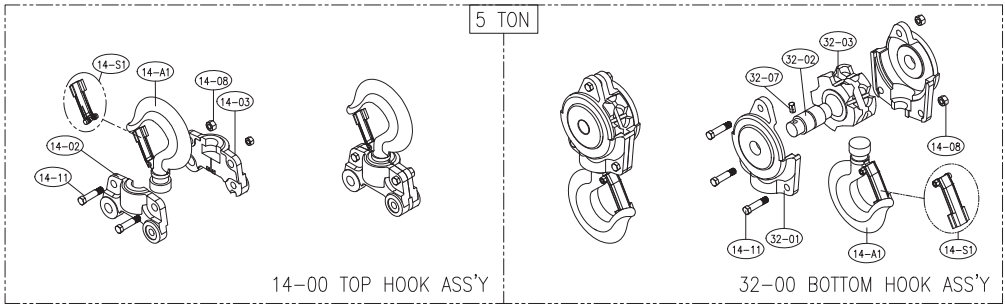

7.5 TON

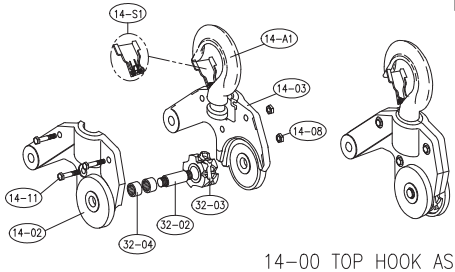

14-00 TOP HOOK ASS'Y

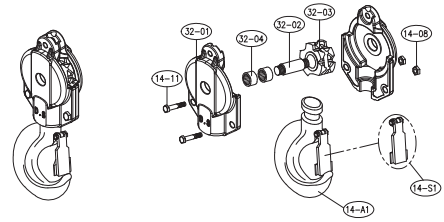

32-00 BOTTOM HOOK ASS'Y

10 TON

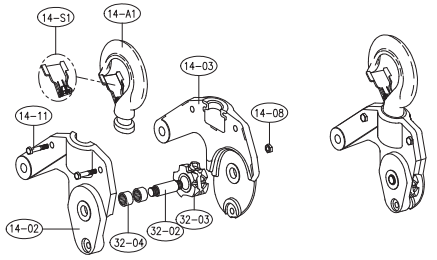

14-00 TOP HOOK ASS'Y

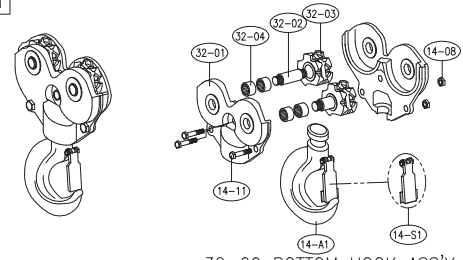

32-00 BOTTOM HOOK ASS'Y

15 TON

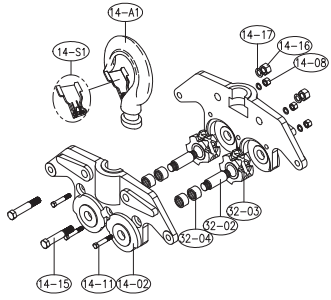

14-00 TOP HOOK ASS'Y

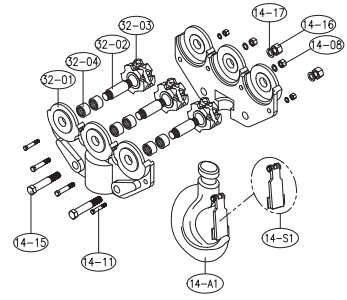

32-00 BOTTOM HOOK ASS'Y

20 TON

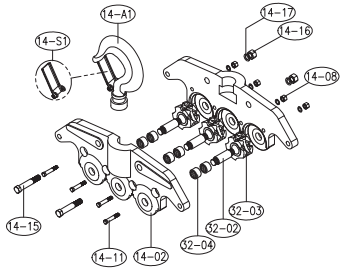

14-00 TOP HOOK ASS'Y

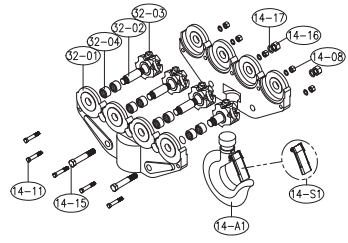

32-00 BOTTOM HOOK ASS'Y

Item	Description	Quantity											Remark
		0.5T	1T	1.5T	2T(W)	2T(S)	3T	5T	7.5T	10T	15T	20T	
01-00	SIDE PLATE 1	1											
02-00	LOAD SHEAVE	1											
03-00	GUIDE	2											
04-00	STRIPPER	1											
05-00	SIDE PLATE 2	1											
06-00	1st GEAR	1											
08-00	PINION SHAFT	1											
09-00	2nd GEAR&3rd GEAR	2											
10-00	SUPPORT PLATE	1											
11-00	GEAR COVER	1											
12-00	U-NUT	6											
13-00	TOP HOOK PIN	1											
14-00	TOP HOOK ASSEMBLY	1											
14-A1	HOOK	N/A			2	N/A	2						
14-S1	SAFETY LATCH SET	2											
14-02	TOP FRAME A	N/A			1	N/A	1				2		
14-03	TOP FRAME B	N/A			1	N/A	1				N/A		
14-08	U-NUT(HEX NUT S/W)	N/A			4	N/A	4	5			7	9	
14-11	HEX BOLT A	N/A			4	N/A	4	5			7	9	
14-15	HEX BOLT B	N/A									4		
14-16	HEX NUT	N/A									4		
14-17	SPRING WASHER	N/A									4		
15-00	HUB	1											
16-00	RATCHET GEAR	1											
17-00	DISC-A	1											
18-00	DISC-B	1											
19-01	PAWL SPRING A	1											
19-02	PAWL SPRING B	1											
20-00	PAWL	2											
21-00	SNAP RING	2											
22-00	END SPRING	1											
23-00	END PIN	1											
24-00	ANCHOR-A	1											
25-00	BRAKE COVER	1											
26-00	HAND WHEEL	1											
27-00	WHEEL WASHER	1											
28-00	PINION NUT	1											
29-00	R PIN	1											
30-00	HAND CHAIN	-											
31-00	WHEEL COVER	1											
32-00	BOTTOM HOOK ASSEMBLY	1											
32-01	BOTTOM FRAME	N/A			2	N/A	2				1		
32-02	AXLE	N/A			1	N/A	1		2	3	5	7	
32-03	SHEAVE	N/A			1	N/A	1		2	3	5	7	
32-04	NEEDLE BEARING	N/A			1	N/A	1		4	6	10	14	
32-06	U-NUT P/W	N/A			2	N/A	2	N/A					
32-07	SPRING PIN	N/A						1	N/A				
33-00	HOOK BOLT	1									N/A		
34-00	U-NUT	1									N/A		
35-00	ANCHOR-B	1											
36-00	LOAD CHAIN	-											
37-00	LABEL	1											
38-00	RIVET	4											
	RAIN COVER	1											
	CHAIN BOX	1											

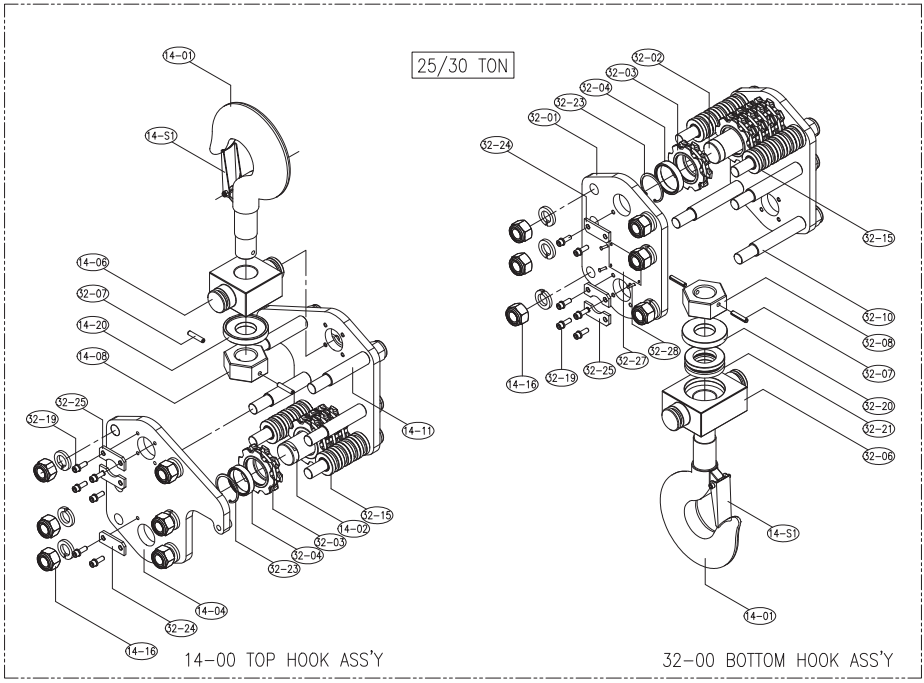
25/30 TON
14-01
14-S1
14-06
32-07
14-20
14-08
32-25
32-19
14-11
32-15
14-02
32-03
32-04
32-23
14-04
32-24
14-16
14-00 TOP HOOK ASS'Y
32-02
32-03
32-04
32-23
32-01
32-24
32-15
32-10
32-08
32-07
32-20
32-21
32-06
32-28
32-27
32-25
32-19
14-16
14-S1
14-01
32-00 BOTTOM HOOK ASS'Y

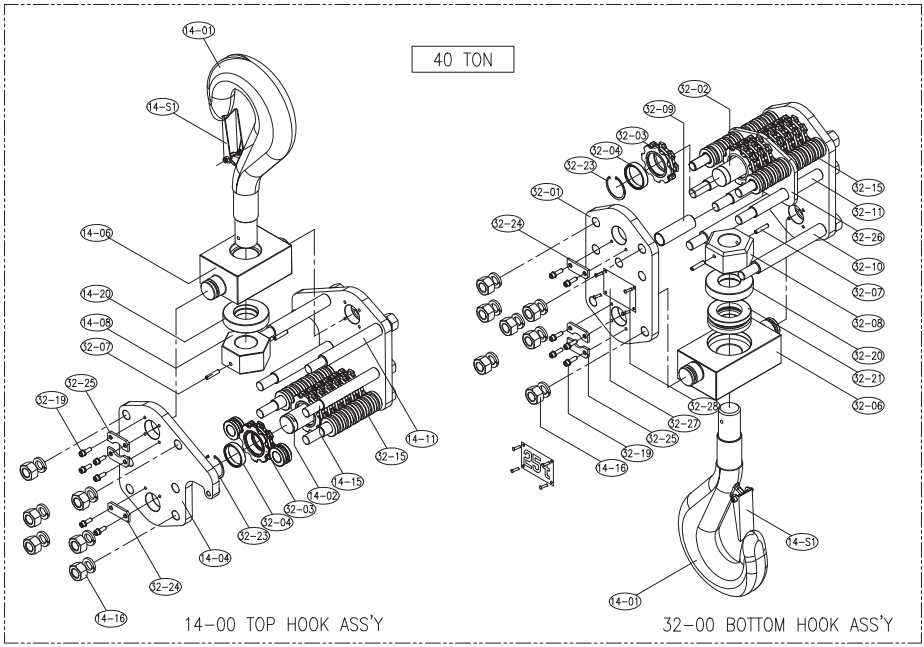
40 TON
14-01
14-S1
14-06
14-20
14-08
32-07
32-25
32-19
14-11
32-15
14-15
14-02
32-03
32-04
32-23
14-04
32-24
14-16
14-00 TOP HOOK ASS'Y
32-02
32-09
32-03
32-04
32-23
32-01
32-24
32-15
32-11
32-26
32-10
32-07
32-08
32-20
32-21
32-06
32-28
32-27
32-25
32-19
14-16
14-S1
14-01
32-00 BOTTOM HOOK ASS'Y

Item	Description	Quantity			Remark
		25T	30T	40T	
14-00	TOP HOOK ASS'Y	1			
14-01	HOOK	1			
14-02	SHEAVE PIN	1			
14-04	LOAD BLOCK PLATE	2			
14-06	TURNING	1			
14-08	HOOK NUT	1			
14-11	STAY BOLT A	6	6	2	
14-S1	SAFETY LATCH SET	2			
14-15	STAY BOLT B	N/A	N/A	4	
14-16	HEX NUT S/W	12			
14-20	BEARING CAP	1			
32-03	IDLE SHEAVE	4	5	7	
32-04	NEEDLE BEARING	4	5	7	
32-07	SPRING PIN	2			
32-15	GUIDE ROLLER	8	10	14	
32-19	HEX WRENCH BOLT	12			
32-23	SNAP RING	4	5	7	
32-24	KEY PLATE A	2			
32-25	KEY PLATE B	4			
32-00	BOTTOM HOOK ASS'Y	1			
14-01	HOOK	1			

Item	Description	Quantity			Remark
		25T	30T	40T	
14-16	HEX NUT S/W	14			
32-01	LOAD BLOCK PLATE	2			
32-02	SHEAVE PIN	1			
32-03	IDLE SHEAVE	5	6	8	
32-04	NEEDLE BEARING	5	6	8	
32-06	TURNING(BOTTOM)	1			
32-07	SPRING PIN	2			
32-08	HOOK NUT	1			
32-09	STAY PIPE	N/A	N/A	2	
32-10	STAY BOLT A	6	6	2	
32-11	STAY BOLT B	N/A	N/A	5	
32-15	GUIDE ROLLER	10	12	16	
32-19	HEX WRENCH BOLT	12			
32-20	BEARING CAP	1			
32-21	THRUST BEARING	1			
32-23	SNAP RING	5	6	8	
32-24	KEY PLATE A	2			
32-25	KEY PLATE B	4			
32-26	SUB BLOCK PLATE	N/A	N/A	1	
32-27	BOTTOM HOOK NAME PLATE	1			
32-28	RIVET	4			

NOTICE

TO ORDER PARTS: Provide product name and serial number, hand chain hoist capacity, part number, part description,and quantity required. Use only DAESAN authorized replace ment parts in the service and maintenance of this hand chain hoist.

GENERAL CONDITIONS OF WARRANTY

WARRANTIES: The Seller warrants to the original using Buyer thereof that the goods sold under this Agreement are free from defects in workmanship and materials for a period of one year from the date of shipment to the original using Buyer. No other express warranties are given and no affirmation of Seller or Seller's agents, by word or action, shall constitute a warranty. No warranty is made for components and accessories made by others when such items are warranted by their respective manufacturers.

Installation or operation of the equipment in any manner other than as recommended by Seller, shall void the warranty.

Any variations in details between the goods furnished herein and those covered in Buyer's specifications are due to standards of manufacture not to be construed as exceptions to the specifications.

DISCLAIMER OF IMPLIED WARRANTIES:

(a) SELLER MAKES NO WARRANTY OF MERCHANTABILITY IN RESPECT TO THE GOODS SOLD UNDER THIS AGREEMENT.

(b) This sale is made WITHOUT ANY WARRANTY BY SELLER THAT THE GOODS ARE SUITABLE FOR ANY PARTICULAR PURPOSE..

(c) Buyer hereby waives all other warranties, guarantees, obligations, liabilities, rights, and remedies arising by law or otherwise including any obligation or liability of the Seller arising from tort, and Buyer shall indemnify Seller from any liability, loss, damage, or claim arising from Buyer's tortious use of the goods sold hereby.

REMEDIES:

(a) Under no conditions shall any goods be returned to Seller without it's prior written consent.

(b) The Buyer's sole and exclusive remedy for breach of any warranty is limited to Seller furnishing, at it's expense, duplicate or repaired parts F.O.B. Seller's plant with installation at Buyer's expense if discovery of a claimed defect occurs during the allowable warranty period, and if Seller's inspection determines a defect exists.

(c) The quantity of material shown by invoice shall in all cases govern settlement for shortages, unless notice of shortage, appropriately documented, is given to the carrier and the Seller upon delivery by the Carrier.

(d) Claims for errors, deficiencies or imperfections shall be deemed waived by the Buyer unless Seller is notified in writing of the basis of such claims within 10 days after discovery of claimed defect and such discovery occurs within the warranted period.

(e) Neither Buyer nor User shall be entitled under this Agreement to recover from Seller any incidental or consequential damages of any nature including but not limited to the cost of any labor expended by others in connection with the goods sold hereby by reason of any alleged nonconformity or breach of warranty on the part of the Seller, nor costs of material or account thereof, nor any lost profits whether determinable or speculative.

DAESAN®

DAESAN INOTEC INC.
www.daesaninotec.com

32-32 Jungahn-Nonggongdangigil, Jungahn-myun,Gongu-si
Chungeongnam-do, South Korea
Email: ygnam@daesanhoist.com / swkang@daesanhoist.com
www.daesaninotec.com