DAESAN®

EME-X-C
SEP.2026

DAESAN® CLH

ELECTRIC CHAIN HOIST

INSTRUCTION MANUAL

for

Installation / Operation / Maintenance / Parts

Includes Food-Grade (Waterproof) Models

⚠WARNING

This equipment should not be installed, operated or maintained by any person who has not read all the contents of these instructions. Failure to read and comply with these instructions or any one of the limitations noted herein can result in serious bodily injury or death, and/or property damage.
CAUTION: “To Reduce the Risk of Electric shock or Injury, Use Indoors Only”

There are no other warranties which extend beyond the description on the Order Acknowledgement and as it may apply to the specifications provided in this publication. The IMPLIED WARRANTIES OF MERCHANTABILITY AND FITNESS FOR A PARTICULAR PURPOSE ARE EXCLUDED. DAESAN shall in no event be liable for any special, direct, indirect incidental or consequential damages to anyone beyond the cost of replacement of the goods sold hereby.

* Specifications are subject to change without prior notice for improvement - Product drawings / images / parts are representative only and are subject to change for improvement

DAESAN®

Table of contents

Description	Page
1. Features	**7**
1.1 Mechanism Group	
1.2 Working Environment Data	
1.3 Hook Suspension Series (Three Phase)	
* Specifications & Dimension (mm)	
1.3.1 Motor Trolley Mounted Series (Three phase)	
* Specification & Dimension (mm)	
1.4 Hook Suspension Series (Single phase)	
* Specification & Dimension (mm)	
1.4.1 Motor Trolley Mounted Series (Single phase)	
* Specification & Dimension (mm)	
1.5 FOOD_Hook Suspension Series (Three Phase)	
1.5.1 FOOD_Motor Trolley Mounted Series (Three phase)	
1.6 Low Headroom Series	
* Specification & Dimension (mm)	
2. General Description of Manual	**18**
2.1 Trolley Series and Classification of Electric Wiring	
3. Safety Precautions	**19**
3.1 Warning and Caution	
3.2 Name Plate and Labels on Products	
4. Installation	**22**
4.1 Checking of Product	
4.2 Installation process	
4.2.1 Checking of Electricity	
4.2.2 Installation of “BOLT with Vent Hole”	
4.2.3 Installation of Chain Container to Hoist Body	
4.2.4 Oil Lubrication on Load Chain and into Chain Container	
* Maximum Chain-Lift-Length, According to each Chain Container	
4.2.5 Checking Load Chain after Installation	
4.2.6 Incorrect Phase Checking (by exchanging one of three black lines)	
4.3 Installation of the Motorized Trolley Mounted Series	
4.3.1 How to Install Trolley on the Runway I-Beam	
* Parts to Adjust I-Beam Width	
* How to Set Up the I-Beam Width of Motorized Trolley	
* Applied Collar Numbers for Each Trolley Capacity on I-Beam	
4.3.2 How to Connect Electric Power Source (“CIS”: customer installation scope under customer responsibility)	
4.4 Initial Start-Up	
5. Precaution during Operation	**31**
6. Maintenance and Servicing	**33**
6.1 Electrical Connection	
6.2 Chain Stopper in the Chain Container	
6.3 Chain Stopper Rubber Bumper	
6.4 Load Chain	

6.5 Measurement of Wear and Replacement of the Load Chain
6.5.1 Checking Chain Alignment (the welded part outward from the center)
6.6 Hook
6.6.1 Measurement of Wear on the Hook (mm)
6.6.2 Chain Anchorage bolt
6.7 Load sheave and Chain Guide
6.8 Brake Operation
6.9 Motor
6.9.1 Motor rating of Hoist and Trolley
6.10 Overwinding & Overload Limiter
6.11 Push Button Pendant Switch
6.12 Overload Alert Sound Limiter (Protector) Audible “beeping’ sound(Optional Device)
6.12.1 Features
6.12.2 How to arrange “Mode Setting”
6.12.3 Assembling figure

7. Preventive Maintenance 49

7.1 Recommended Periodic Maintenance and Inspection Table
7.2 Lubrication
7.3 Recommended Technical Support for Various Spare Parts
7.4 Troubleshooting

8. Parts Illustrations 52

8.1 Exploded View of CLH HOIST Parts
(DSS-0.5S, DSS-1S, DSS-2W)
8.2 Exploded View of CLH HOIST Parts
(DST-1S, DST-2W & EDST-1S, EDST-2W, EDSS-0.5S, EDSS-1S, EDSS-2W)
8.3 Exploded View of Trolley Parts
(DSTM-1S, DSTM-2W & EDSTM-1S, EDSTM-2W & DSSM-0.5S, DSSM-1S,
DSSM-2W & EDSSM-0.5S. EDSSM-1S, EDSSM-2W)
8.3 Exploded View of Trolley Parts (8P)
(DSSM-1S, DSSM-2W)
8.4 Exploded View of Low Headroom Hoist
(EDSTHM-1S, EDSTHM-2W)
8.5 Exploded View of Lug Mount Plain Trolley Kit 0.5, 1. 2 ton Capacity
8.6 Exploded View of Assembled Parts
8.7 Exploded View of Electric Parts
8.8 PART LIST

9. INVERTER (PowerFlex 523 Adjustable Frequency AC Drive) 70

9.1 Operating Hoist & Trolley (Dual Speed)
9.2 Push Button Control for Inverter Hoist
9.3 Trial Operation
9.4 Inverter Parameter Settings
9.5 Display and Control Keys
9.6 Viewing and Editing Parameters

10. Hour/Counter Meter (OPTION) 75

11. Lug Mount Plain Trolley Kit (OPTION) 76

11.1 How to Install Lug Mount Plain Trolley on the Runway I-Beam

12. Electric Connection Drawing **77**

NOTICE

TO ORDER PARTS : Provide part number, part description, quantity required, and Product Number or Serial Number of Hoist.

SAFETY ALERT SYMBOL ⚠

The Safety Alert Symbol is used in this manual to indicate hazards and to alert the reader to information that should be known, understood, and followed in order to avoid DEATH or SERIOUS INJURY.

Read and understand this manual before using the hoist.

Important issues to remember during operation are provided at the hoist control stations, at various locations on the hoist and in this manual by DANGER, WARNING, or CAUTION instructions or placards. That alert personnel to potential hazards, proper operation, load limitations, and more.

⚠DANGER Indicates an imminently hazardous situation which, if not avoided, will result in death or serious injury.

⚠WARNING Indicates a potentially hazardous situation which, if not avoided, could result in death or serious injury.

⚠CAUTION Indicates a potentially hazardous situation which, if not avoided, may result in minor or moderate injury. It may also be used to alert

⚠CAUTION

These general instructions deal with the normal installation, operation, and maintenance situations encountered with the equipment described herein. The instructions should not be interpreted to anticipate every possible contingency or to anticipate the final system, crane, or configuration that uses this equipment

This manual includes instructions and parts information for a variety of hoist types. Therefore, all instructions and parts information may not apply to any one type or size of specific hoist. Disregard those portions of the instructions that do not apply.

Record hoist serial number on the front cover of this manual for identification and future reference to avoid referring to the wrong manual for information or instructions on installation, operation, maintenance, or parts.

Use only the authorized replacement parts in the service and maintenance of this hoist.

⚠WARNING

Equipment described herein is not designed for and should not be used for lifting, supporting, or transporting humans.

Equipment described herein should not be used in conjunction with other equipment unless necessary and/or required safety devices applicable to the system or application are installed by the system designer, system manufacturer, crane manufacturer, installer, or user.

Modifications to upgrade, rerate, or otherwise alter this equipment shall be authorized only by the original equipment manufacturer or qualified professional engineer.

Equipment described herein may be used in the design and manufacture of cranes or monorails. Additional equipment or devices may be required for the crane or monorail to comply with applicable crane design and safety standards.

The System designer, system manufacturer, crane designer, crane manufacturer, installer, or user is responsible to assure that the installation and associated wiring of these electrical components is in compliance with the electrical standard of the applied country.

Failure to read and comply with any one of the limitations noted herein can result in serious bodily injury or death, and/or property damage.

⚠DANGER

HAZARDOUS VOLTAGES ARE PRESENT IN THE CONTROL BOX, OTHER ELECTRICAL COMPONENTS, AND CONNECTIONS BETWEEN THESE COMPONENTS

Before performing ANY mechanical or electrical maintenance on the equipment, de-energize (disconnect) the main switch supplying power to the equipment; and lock and tag the main switch in the de-energized position.

⚠DANGER

Do not operate the equipment without control enclosure cover or covers in place.

Only trained and competent personnel should inspect and repair this equipment

NOTICE

This manual contains information for safe operation of an overhead hoist. Taking precedence over any specific rule, however, is the most important rule of all – “USE COMMON SENSE”. Operation of an overhead hoist involves more than operating the controls. The operator must consider and anticipate the motions and actions the will occur as a result of operating the controls.

If the hoist owner/user requires additional information, or if any information in the manual is not clear, contact the manufacturer or the distributor of the hoist. Do not install, inspect, test, maintain, or operate this hoist unless this information is fully understood.

When contacting manufacturer or the distributor of the hoist, always make reference to the serial number of the hoist.

A regular schedule of inspection of the hoist should be established and records maintained.

⚠WARNING

Before installing, removing, inspecting, or performing any maintenance on a hoist, the main switch shall be de-energized. Lock and tag the main switch in the de-energized. Follow other maintenance procedures outlined in this manual

Additional WARNINGS are listed in various portions of this manual. Personnel shall read and follow these WARNINGS. Failure to read and comply with these WARNINGS as well as other instructions or any limitations noted in this manual could result in serious bodily injury or death, and/or property damage.

1. Features

DAESAN hoists feature lower headroom than conventional hoists. Due to their compact size these hoists fit well into jib crane and light rail applications. These hoists are available for single-phase and three-phase applications. Careful consideration has been given to optimize performance.
All hoists are equipped with quality parts and mechanisms to provide proper lifting and traversing of the load. Components undergo numerous tests and inspections, while our production processes meet stringent quality requirements.

- ✓ Brake System ---------- cone brake
- ✓ Upper Limit Switch ---------- prevents over-lifting of chain
- ✓ Push Button Pendant Control Switch-------- with emergency stop button

1.1 Mechanism Group

DAESAN Electric Chain Hoists are allocated to mechanism groups in accordance with the following regulations. Under the allowance of the following mechanism groups, the hoist should be operated and should not exceed the nominal values. On each identification plate, the following is indicated.

Hook suspension chain hoist <3phase> : FEM 9.511 (Hoist = FEM 2m 40% ED)
Hook suspension chain hoist <1phase> : FEM 9.511 (Hoist = FEM 2m 30% ED)

Motor trolley mounted chain hoist <3phase> : **FEM9.511**(Hoist/Trolley = FEM2m / 1Bm 40 / 25%ED)
Motor trolley mounted chain hoist <1phase> : **FEM9.511**(Hoist/Trolley = FEM2m / 1Bm 30 / 25%ED)

■ **FEM Mechanism Group 9.511** (Rules for Design of Serial Lifting Equipment : Classification of Mechanism)

Mechanism group	1 Bm	1 Am	2 m	3 m	4 m	5 m
Light group	Average operating period per day (h)					
Light k < 0.50	2	2-4	4-8	8-16	16	-
Medium 0.50 < k < 0.63	1	1-2	2-4	4-8	8-16	16
Heavy 0.63 < k < 0.8	0.5	0.5-1	1-2	2-4	4-8	8-16
Very Heavy 0.8 < 1.00	0.25	0.5	0.5-1	1-2	2-4	4-8

Cubic Mean Value (k) refers to percentage of W.L.L. (Working load limit). Ex: k = 0.63 means 63% of W.L.L.

NOTICE

DAESAN electric chain hoists should be operated under the allowance of the above FEM determination. The above mechanism group is valid for the entire period of operation, and for reasons of operational safety, hoists shall not be operated outside these recommendations.

1.2 Working Environment Data

- ✓ Ambient temperature : from -20 °C to 40°C
- ✓ Protection class : IP54
- ✓ Side pulling angle : max. 3 degrees
- ✓ Sound level : 80dB (A)

⚠WARNING

DAESAN electric chain hoists are designed for indoor use. For outdoor use, the hoist shall be located under roof to assure rainproof operation. The operator SHALL

- ✓ NOT expose the hoist to rain or condensation
- ✓ NOT store the hoist in a humid place
- ✓ COVER the hoist or MOVE it back under roof after use, when it is used outdoors
- ✓ HANG the hoist on a suitable beam or crane or from the ceiling

⚠CAUTION

If the above normal operation conditions are exceeded, or the electric hoist is operated often under adverse conditions, the information in the operating instructions must be adapted accordingly. In this case the manufacturer is to be consulted.

1.3 Hook Suspension Series (Three Phase)

* Specifications

MODEL		EDST Series (Inverter Control)		DST Series	
		EDST-1S	EDST-2W	DST-1S	DST-2W
Capacity (WLL)	ton	1t	2t	1t	2t
Standard lift	m	4			
Pushbutton cord length	m	3.5			
Lifting speed (60/50hz)	m/min	2.7-8.2	1.3-4.1	8.2/6.8	4.1/3.4
Lifting motor	kw	1.8		1.8	
Voltage	v	220 / 380 / 440 (request for special voltage)			
Load chain dia. x pitch	mm	7.1x21		7.1x21	
Net weight	kg	63	77	58	71
Weight for additional 1m lift	kg	1.3	2.4	1.3	2.4

WLL (working load limit) : All units tested at 125% of the rated capacity.
Longer lifts affect the chain container size. Please contact the factory or the authorized distributor.

* Dimension (mm)

MODEL		EDST Series (Inverter Control)		DST Series	
		EDST-1S	EDST-2W	DST-1S	DST-2W
	A	606		526	
	B	264		264	
	C	342		262	
	D	329		311	
	E	146	198	146	198
	F	183	131	165	113
	M	35	53.5	35	53.5
	H	400	680	400	680
	L	358	462	324	428

* H: MINIMUM HEADROOM
* Hook is produced by the hot forging process and has +-2%variation from nominal dimension

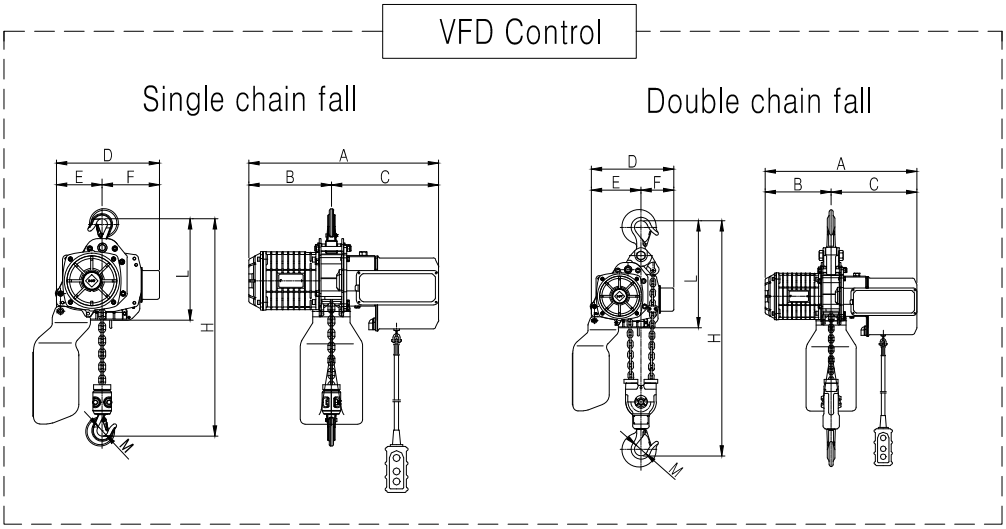

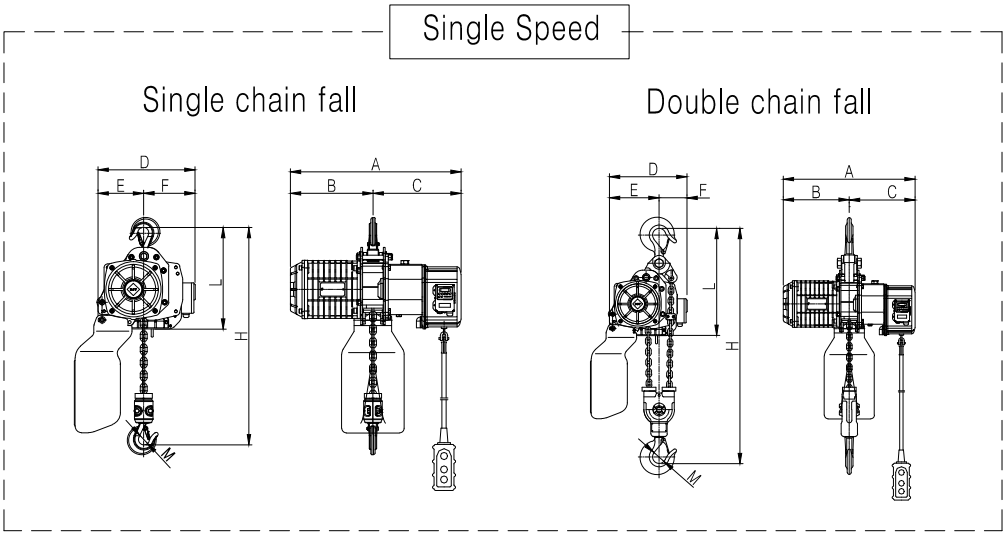

1.3.1 Motor Trolley Mounted Series (Three phase)

* Specification

MODEL		EDSTM Series (Inverter Control)		DSTM Series	
		EDSTM-1S	EDSTM-2W	DSTM-1S	DSTM-2W
Capacity (WLL)	ton	1t	2t	1t	2t
Standard lift	m	4			
Pushbutton cord length	m	3.5			
Lifting speed (60/50hz)	m/min	2.7-8.2	1.3-4.1	8.2/6.8	4.1/3.4
Traversing speed (60/50hz)	m/min	5.2-15.2		15/12	
Voltage	V	220 / 380 / 440 (request for special voltage)			
Lifting motor	kw	1.8		1.8	
Traversing motor	kw	0.4			
Load chain dia. x pitch	mm	7.1x21		7.1x21	
Net weight	kg	102	122	98	117
I-beam flange width	mm	75-125	100-150	75-125	100-150
I-beam curve radius	mm	800			
Weight for additional 1m lift	kg	1.38	2.48	1.38	2.48

WLL (working load limit) : All units tested at 125% of the rated capacity.
Longer lifts affect the chain container size. Please contact the factory or the authorized distributor.

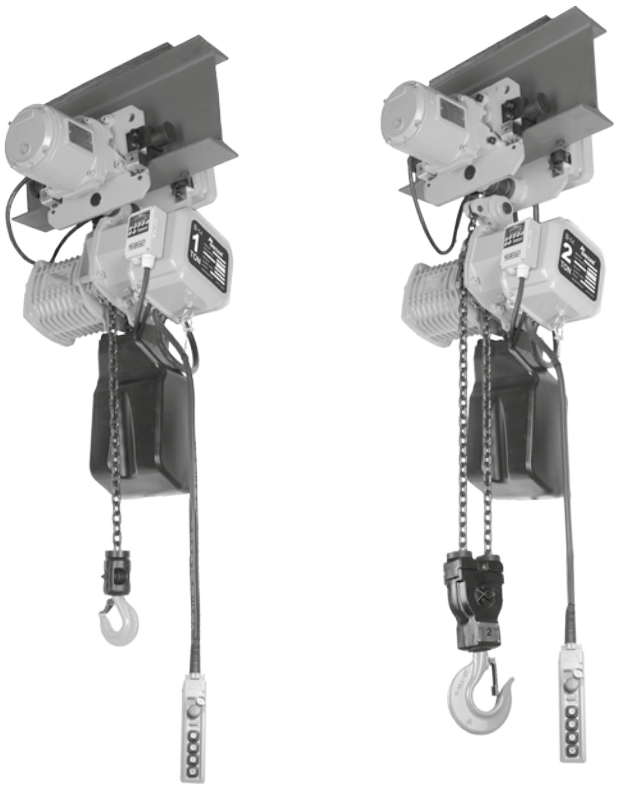

* Dimension (mm)

MODEL		EDSTM Series (Inverter Control)		DSTM Series	
		EDSTM-1S	EDSTM-2W	DSTM-1S	DSTM-2W
* The figure B" can be calculated =1/2x(width(mm) of the traversing rail) * H : minimum headroom * Hook is produced by the hot forging process and has +-2%variation from nominal dimension	A	551+2B	580+2B	507.5+2B	536.5+2B
	B	254+B	268+B	253.5+B	268+B
	C	297+B	312+B	254+B	268.5B
	D	146	198	146	198
	E	183	131	165	113
	F	300	315	298	315
	G	110	125.4	110	125.4
	H	446	660	446	660
	I	264		264	
	J	342		262	
	K	165	161	131	130
	L	393	458	359	424
	M	35	53.5	35	53.5

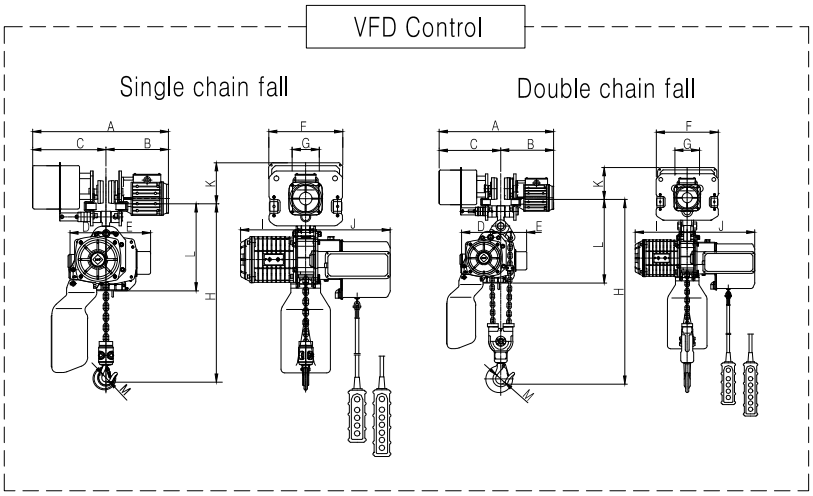

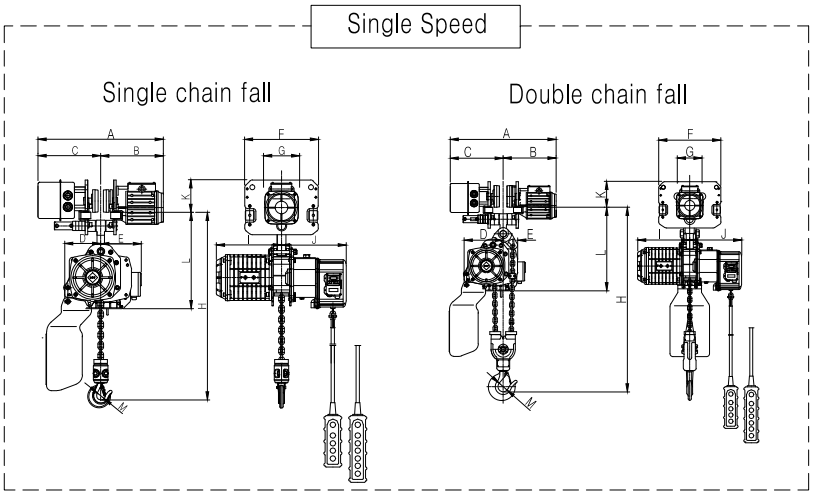

1.4 Hook Suspension Series (Single phase)

* Specification

MODEL		EDSS Series (Inverter Control)			DSS Series		
		EDSS-0.5S	EDSS-1S	EDSS-2W	DSS-0.5S	DSS-1S	DSS-2W
Capacity (WLL)	ton	0.5t	1t	2t	0.5t	1t	2t
Standard lift	m	4					
Pushbutton cord length	m	3.5					
Lifting speed (60/50hz)	m/min	1.7-5.2		1.0-2.6	8/6.7	4.1/3.4	2/1.7
Lifting motor	kw	0.8	1.8		0.8		
Voltage	v	220					
Load chain dia. x pitch	mm	6.3x19	7.1x21		6.3x19	7.1x21	
Net weight	kg	63	64	77	57	60	73
Weight for additional 1m lift	kg	1.06	1.30	2.40	1.06	1.30	2.40

WLL (working load limit) : All units tested at 125% of the rated capacity.
Longer lifts affect the chain container size. Please contact the factory or the authorized distributor.

* Dimension (mm)

MODEL		EDSS Series (Inverter Control)			DSS Series		
		EDSS-0.5S	EDSS-1S	EDSS-2W	DSS-0.5S	DSS-1S	DSS-2W
* H: MINIMUM HEADROOM * Hook is produced by the hot forging process and has +-2%variation from nominal dimension	A	606			526	545	
	B	264			264		
	C	342			262	281	
	D	311			311		
	E	146		198	146		198
	F	165		113	165		113
	M	34	35	53.5	34	35	53.5
	H	384	400	680	384	400	680
	L	378		482	324		428

VFD Control

Single chain fall

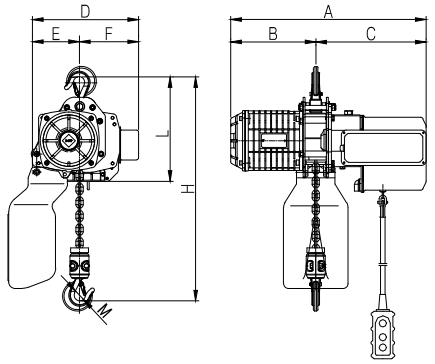

Double chain fall

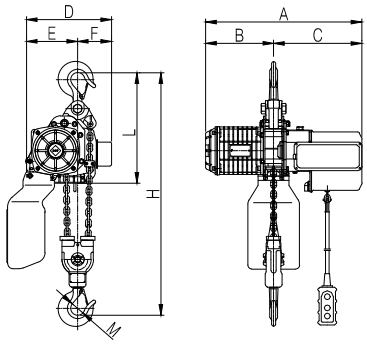

Single Speed

Single chain fall

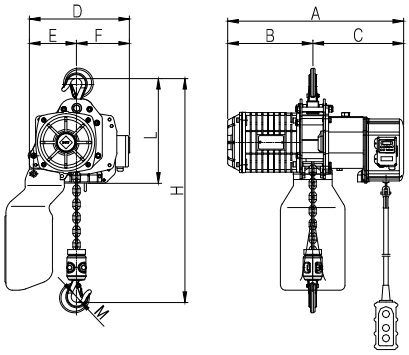

Double chain fall

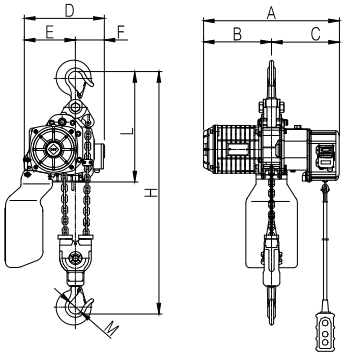

1.4.1 Motor Trolley Mounted Series (Single phase)

* Specification

MODEL		EDSSM Series (Inverter Control)			DSSM Series		
		EDSSM-0.5S	EDSSM-1S	EDSSM-2W	DSSM-0.5S	DSSM-1S	DSSM-2W
Capacity (WLL)	ton	0.5t	1t	2t	0.5t	1t	2t
Standard lift	m	4					
Pushbutton cord length	m	3.5					
Lifting speed (60/50hz)	m/min	1.7-5.2		1.0-2.6	8/6.7	4.1/3.4	2/1.7
Traversing speed (60/50hz)	m/min	5.2-15.2			22/18 (4P) / 11/9 (8P)		
Lifting motor	kw	0.8	1.8		0.8		
Voltage	v	220					
Traversing motor	kw	0.4			0.4 (4P) / 0.2 (8P)		
Load chain dia. x pitch	mm	6.3x1.9	7.1x21		6.3x1.9	7.1x21	
Net weight	kg	98	99	122	96	99	119
I-beam flange width	mm	75-125		100-150	75-125		100-150
I-beam curve radius	mm	800					
Weight for additional 1m lift	kg	1.14	1.38	2.48	1.14	1.38	2.48

WLL (working load limit) : All units tested at 125% of the rated capacity.

Longer lifts affect the chain container size. Please contact the factory or the authorized distributor.

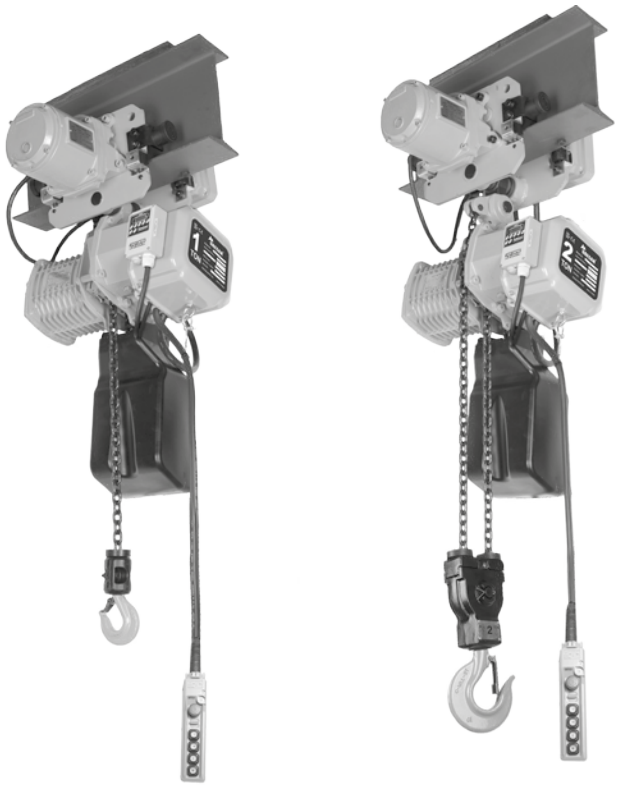

* Dimension (mm)

MODEL		EDSSM Series (Inverter Control)			DSSM Series (4P / 8P)		
		EDSSM-0.5S	EDSSM-1S	EDSSM-2W	DSSM-0.5S	DSSM-1S	DSSM-2W
* The figure B" can be calculated =1/2x(width(mm) of the traversing rail) * H: MINIMUM HEADROOM * Hook is produced by the hot forging process and has +-2%variation from nominal dimension	A	551+2B		580+2B	507.5+2B /596+2B		536.5+2B / 626+2B
	B	254+B		268+B	253.5+B / 258+B		268+B / 273+B
	C	297+B		312+B	254+B / 338+B		268.5+B / 353+ B
	D	146		198	146		198
	E	165		113	165		113
	F	300		315	300		315
	G	110		125.4	110		125.4
	H	434	446	660	434	446	660
	I	264			264		
	J	342			281		
	K	165		161	165		161
	L	393		458	359		424
	M	34	35	53.5	34	35	53.5

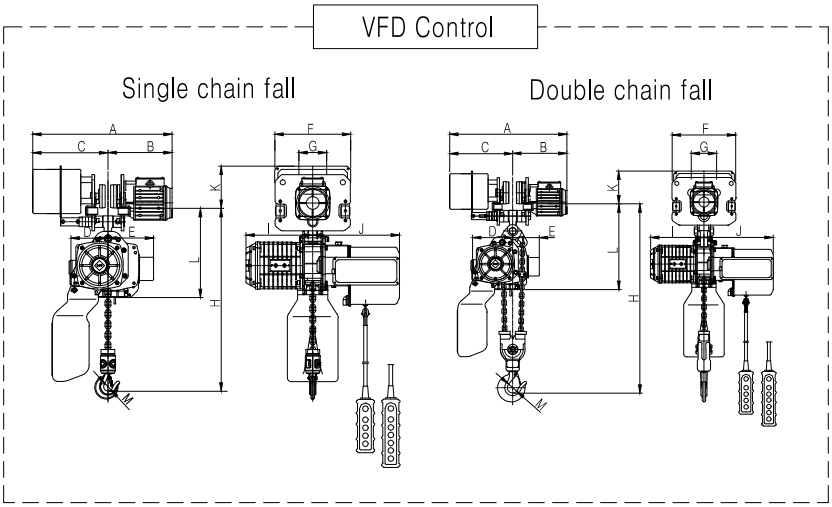

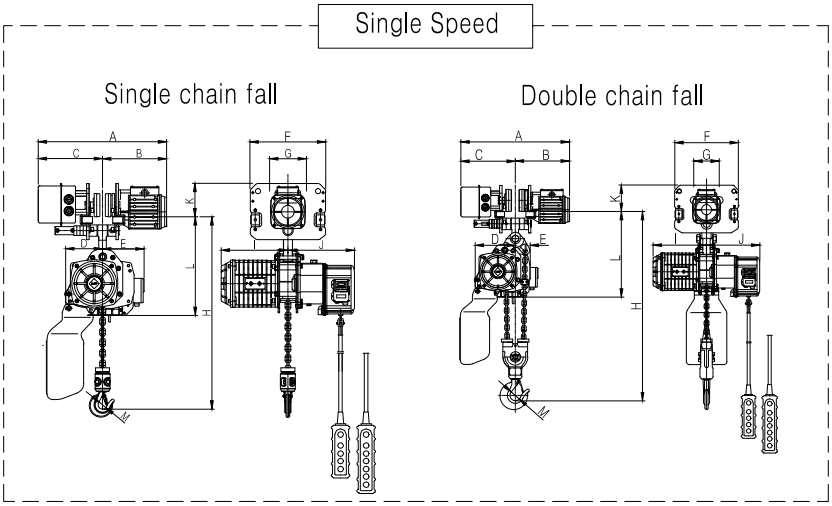

1.5 DSTF, DSSF Series (Food Grade Chain Hoist)

* Specification

MODEL		DSTF Series (Magnetic Control)				DSSF Series (Magnetic Control)			
		DSTFS-0.5S	DSTFN-1S	DSTFS-1W	DSTFN-2W	DSSFS-0.5S	DSSFN-1S	DSSFS-0.5S	DSSFN-2W
Capacity (WLL)	Ton	0.5	1		2	0.5	1		2
Power supply	V	220,380,440,460,480				220			
Standard lift	m	4							
Pendant cable length	m	3.5							
Lifting speed (m / min)	m/ min	8.2		4.1		4.1		2	
Lifting motor	Kw	1.8				0.8			
Rated time	min	30				20			
Duty rating	%ED	40%ED				30%ED			
Load chain (dia. x pitch)	mm	7.1 x 21.0							
Chain fall	no.	1		2		1		2	
Weight	kg	78		85		78		85	
Weight for additional 1m lift	kg	1.31		2.37		1.31		2.37	

WLL (working load limit) : All units tested at 125% of the rated capacity.

Longer lifts affect the chain container size. Please contact the factory or the authorized distributor.

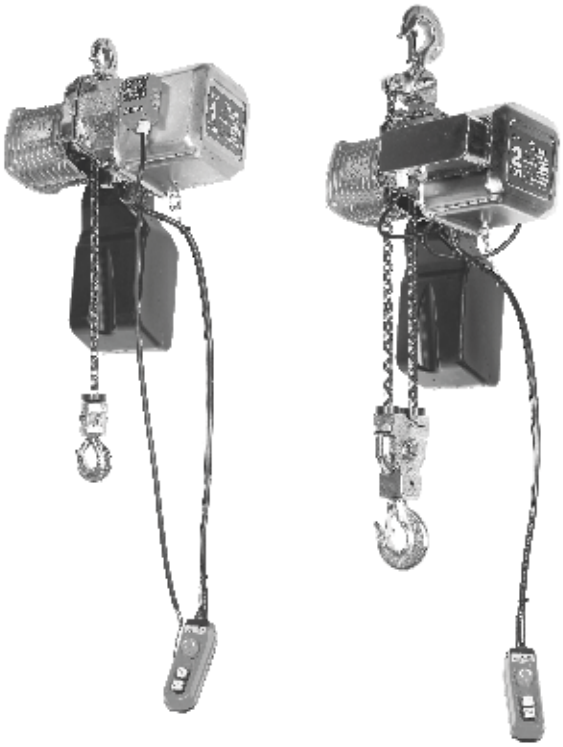

* Dimension (mm)

MODEL		DSTF, DSSF Series (Magnetic Control)			
		DSTFS-0.5S DSSFS-0.5S	DSTFS-1W DSSFS-1W	DSTFN-1S DSSFN-1S	DSTFN-2W DSSFN-2W
* The figure B" can be calculated =1/2x(width(mm) of the traversing rail) * H: MINIMUM HEADROOM * Hook is produced by the hot forging process and has +-2%variation from nominal dimension	A	606			
	B	264			
	C	342			
	D	311	314	311	314
	E	146	201	146	201
	F	165	113	165	113
	G	35	53.5	35	53.5
	H	420	665	420	665

Single chain fall

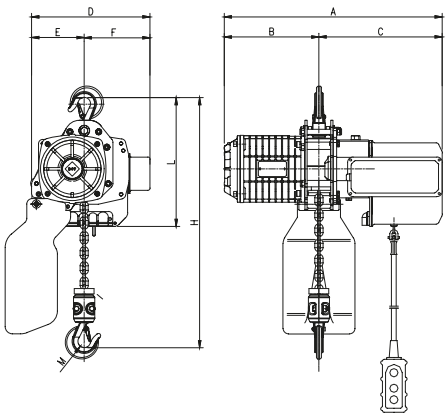

Double chain fall

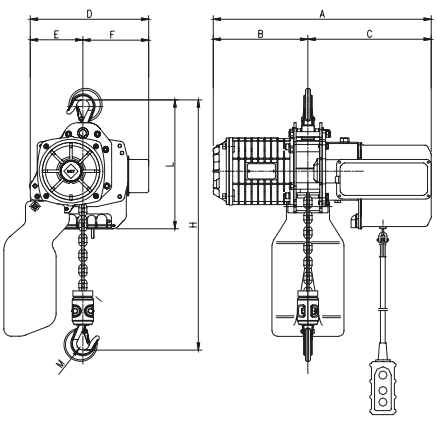

1.6 DSTFM, DSSFM Series (Food Grade Chain Hoist)

* Specification

MODEL		DSTFM Series (Magnetic Control)				DSSFM Series (Magnetic Control)			
		DSTFSM-0.5S	DSTFNM-1S	DSTFSM-1W	DSTFNM-2W	DSSFSM-0.5S	DSSFNM-1S	DSSFSM-0.5S	DSSFNM-2W
Capacity (WLL)	Ton	0.5	1		2	0.5	1		2
Power supply	V	220,380,440,460,480				220			
Standard lift	m	4							
Pendant cable length	m	3.5							
Lifting speed (m / min)	m/ min	8.2		4.1		4.1		2	
Traversing speed (m / min)	m/ min	15				22			
Lifting motor	Kw	1.8				0.8			
Traversing motor	Kw	0.4							
Rated time	min	30				20			
Duty rating	%ED	40%ED				30%ED			
Load chain (dia. x pitch)	mm	7.1 x 21.0							
Chain fall	no.	1		2		1		2	
I-beam flange width	mm	75-125		100-150		75-125		100-150	
I-beam min. curve radius	mm	800							
Weight	kg	112		125		112		125	
Weight for additional 1m lift	kg	1.36		2.42		1.36		2.42	

WLL (working load limit) : All units tested at 125% of the rated capacity.

Longer lifts affect the chain container size. Please contact the factory or the authorized distributor.

* Dimension (mm)

MODEL		DSTFM,DSSFM Series (Magnetic Control)			
		DSTFSM-0.5S DSSFSM-0.5S	DSTFSM-1W DSSFSM-1W	DSTFNM-1S DSSFNM-1S	DSTFNM-2W DSSFNM-2W
* The figure B" can be calculated =1/2x(width(mm) of the traversing rail) * H: MINIMUM HEADROOM * Hook is produced by the hot forging process and has +-2%variation from nominal dimension	A	551+2B	580+2B	551+2B	580+2B
	B	254+B	268+B	254+B	268+B
	C	297+B	212+B	297+B	212+B
	D	146	198	146	198
	E	165	131	165	131
	F	300	315	300	315
	G	110	125	110	125
	H	446	660	446	660
	I	264			
	J	342			
	K	165	161	165	161
	L	393			
	M	35	53.5	35	53.5

Single chain fall

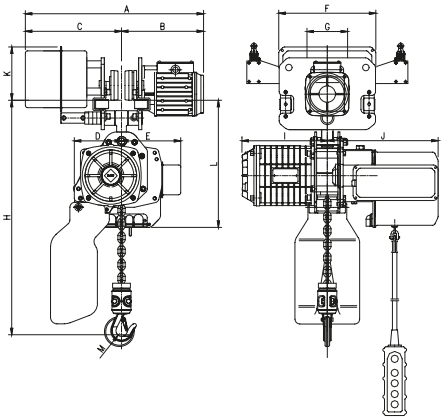

Double chain fall

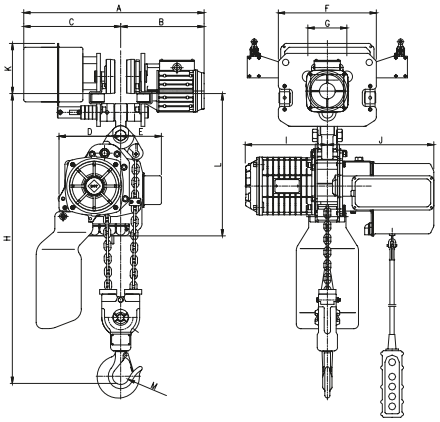

1.7 EDSTF, EDSSF Series (Food Grade Chain Hoist)

* Specification

MODEL		EDSTF Series (Inverter Control)				EDSSF Series (Inverter Control)			
		EDSTFS-0.5S	EDSTFN-1S	EDSTFS-1W	EDSTFN-2W	EDSSFS-0.5S	EDSSFN-1S	EDSSFS-0.5S	EDSSFN-2W
Capacity (WLL)	Ton	0.5	1		2	0.5	1		2
Power supply	V	220,380,440,460,480				220			
Standard lift	m	4							
Pendant cable length	m	3.5							
Lifting speed (m / min)	m/ min	2.7-8.2		1.3-4.1		2.7-8.2		1.3-4.1	
Lifting motor	Kw	1.8							
Rated time	min	20							
Duty rating	%ED	40%ED / 20%ED							
Load chain (dia. x pitch)	mm	7.1 x 21.0							
Chain fall	no.	1		2		1		2	
Weight	kg	78		85		78		85	
Weight for additional 1m lift	kg	1.31		2.37		1.31		2.37	

WLL (working load limit) : All units tested at 125% of the rated capacity.

Longer lifts affect the chain container size. Please contact the factory or the authorized distributor.

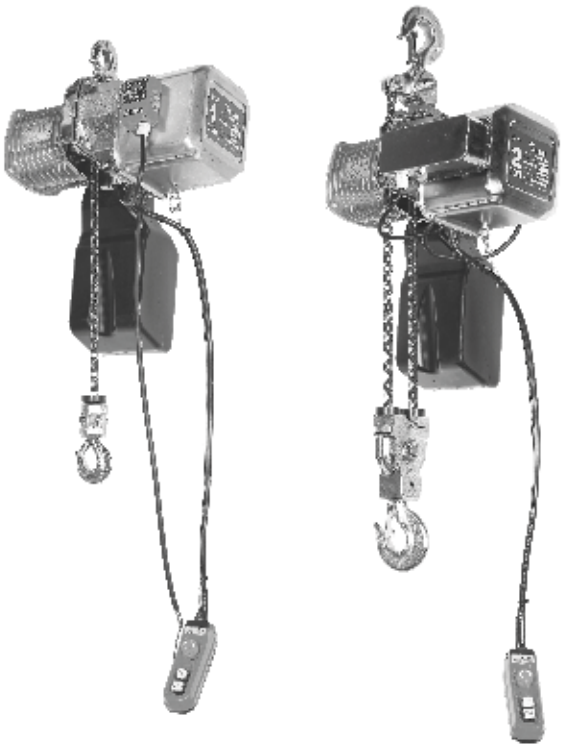

* Dimension (mm)

MODEL		EDSTF, EDSSF Series (Inverter Control)			
		EDSTFS-0.5S EDSSFS-0.5S	EDSTFS-1W EDSSFS-1W	EDSTFN-1S EDSSFN-1S	EDSTFN-2W EDSSFN-2W
* The figure B" can be calculated =1/2x(width(mm) of the traversing rail) * H: MINIMUM HEADROOM * Hook is produced by the hot forging process and has +-2%variation from nominal dimension	A	606			
	B	264			
	C	342			
	D	329	332	329	332
	E	146	201	146	201
	F	183	131	183	131
	G	35	53.5	35	53.5
	H	420	665	420	665

Single chain fall

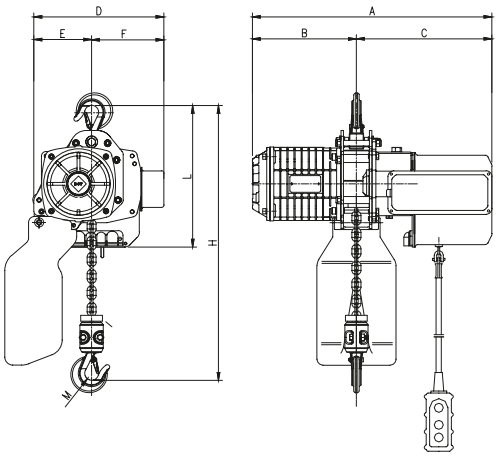

Double chain fall

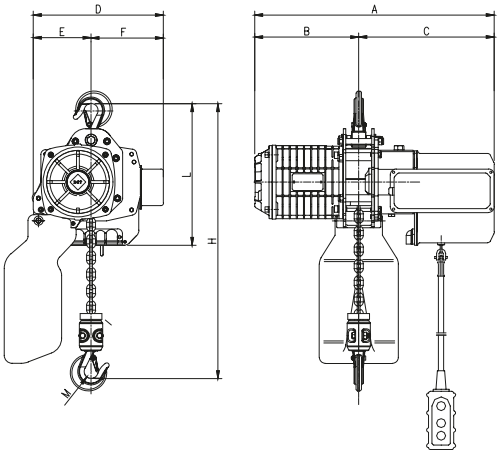

1.8 EDSTFM, EDSSFM Series (Food Grade Chain Hoist)

* Specification

MODEL		EDSTFM Series (Inverter Control)				EDSSFM Series (Inverter Control)			
		EDSTFSM-0.5S	EDSTFNM-1S	EDSTFSM-1W	EDSTFNM-2W	EDSSFSM-0.5S	EDSSFNM-1S	EDSSFSM-0.5S	EDSSFNM-2W
Capacity (WLL)	Ton	0.5	1		2	0.5	1		2
Power supply	V	220,380,440,460,480				220			
Standard lift	m	4							
Pendant cable length	m	3.5							
Lifting speed (m / min)	m/ min	2.7-8.2		1.3-4.1		2.7-8.2		1.3-4.1	
Traversing speed (m / min)	m/ min	5.2-15.2							
Lifting motor	Kw	1.8				0.8			
Traversing motor	Kw	0.4							
Rated time	min	20							
Duty rating	%ED	40%ED / 20%ED							
Load chain (dia. x pitch)	mm	7.1 x 21.0							
Chain fall	no.	1		2		1		2	
I-beam flange width	mm	75-125		100-150		75-125		100-150	
I-beam min. curve radius	mm	800							
Weight	kg	112		125		112		125	
Weight for additional 1m lift	kg	1.36		2.42		1.36		2.42	

WLL (working load limit) : All units tested at 125% of the rated capacity.

Longer lifts affect the chain container size. Please contact the factory or the authorized distributor.

* Dimension (mm)

MODEL		EDSTFM,EDSSFM Series (Inverter Control)			
		EDSTFSM-0.5S EDSSFSM-0.5S	EDSTFSM-1W EDSSFSM-1W	EDSTFNM-1S EDSSFNM-1S	EDSTFNM-2W EDSSFNM-2W
* The figure B" can be calculated =1/2x(width(mm) of the traversing rail) * H: MINIMUM HEADROOM * Hook is produced by the hot forging process and has +-2%variation from nominal dimension	A	551+2B	580+2B	551+2B	580+2B
	B	254+B	268+B	254+B	268+B
	C	297+B	212+B	297+B	212+B
	D	146	198	146	198
	E	183	131	183	131
	F	300	315	300	315
	G	110	125	110	125
	H	446	660	446	660
	I	264			
	J	342			
	K	165	161	165	161
	L	393			
	M	35	53.5	35	53.5

Single chain fall

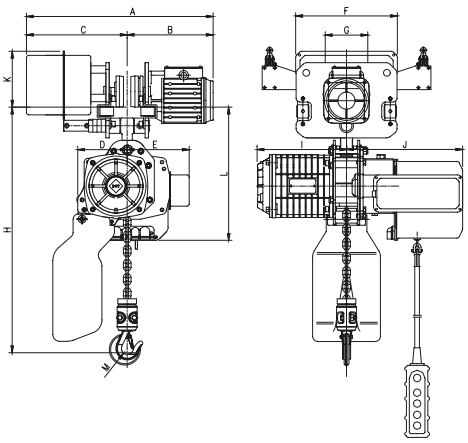

Double chain fall

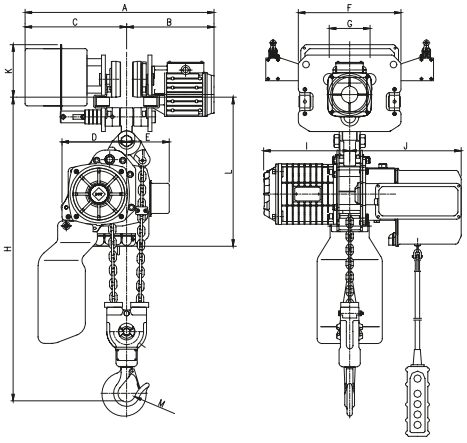

1.9 Low Headroom Series

* Specification

Model	DUAL SPEED	DSTHM-1S	EDSTHM-1S	DSTHM-2W	EDSTHM-2W
Capacity	ton	1	1	2	2
Chain falls	no	1	1	2	2
Standard lift	m	4	4	4	4
Push button cord	m	3.5	3.5	3.5	3.5
Lifting speed	m/min	8.2	2.7 – 8.2	4.1	1.3 – 4.1
Traversing speed	m/min	15	5.2 – 15.2	15	5.2 – 15.2
Hoist motor output	kw	1.8	1.8	1.8	1.8
Trolley motor output	kw	0.4	0.4	0.4	0.4
Load chain (dia x pitch)	mm	7.1 X 21	7.1 x 21	7.1 X 21	7.1 x 21
I-beam applied width	mm	75 - 125	75 – 125	100 - 150	100 -150
I-beam min. curve radius	mm	N/A	N/A	N/A	N/A
Weight	kg	130	134	148	152.5

* Dimension (mm)

Model	DUAL SPEED	DSTHM-1S	EDSTHM-1S	DSTHM-2W	EDSTHM-2W
*The figure “B” can be calculated as below w. *B=1/2 x with of traversing rail *2B=2 x 1/2 x width of traversing rail *H = minimum headroom *Hook is produced by the hot forging process and has +-2% variation from nominal dimension	A	799	799	815	815
	B	254+B	254+B	268+B	268+B
	C	254+B	298+B	269+B	312+B
	D	264			
	E	262	343	262	343
	G	219		188	
	H	265		455	
	I	483		513	
	J	24		30	
	M	35		63.5	
	K	166		160	

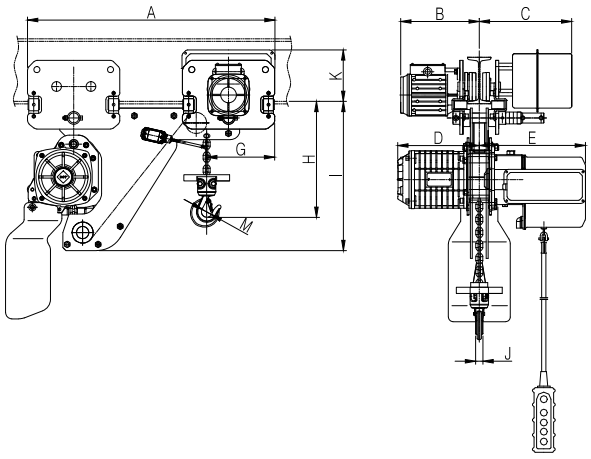

2. General Description of Manual

The product is supplied together with the manual that is important to keep readily accessible

- ✓ During installation or set-up
- ✓ For training operators & the maintenance of the equipment
- ✓ For “Safety Precautions” & Operation instructions

2.1 Trolley Series and Classification of Electric Wiring

DAESAN trolleys are designed to form an integral hoist/trolley combination, keeping the load equally distributed for easy traversing and long life.

Hook suspension trolleys are available as push/pull and hand-geared versions. A lug mounted push/pull trolley is also available for easy mounting to the hoist by removing the top hook and bolting in the supplied lug connector.

Motor Trolley

Geared Trolley

Lug Mount Plain Trolley Kit

*** Rubber bumper is an optional item**

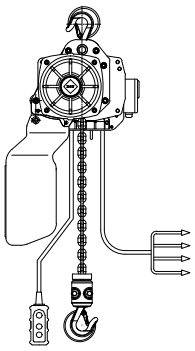

Hook Suspension Hoist

Plain Trolley Hoist
Geared Trolley hoist

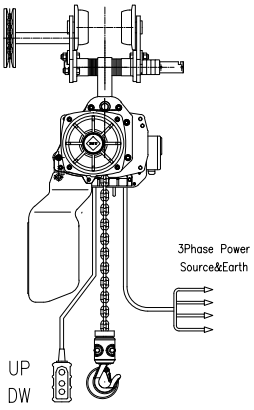

Plain Trolley Crane-mounted
Geared Trolley Crane-mounted

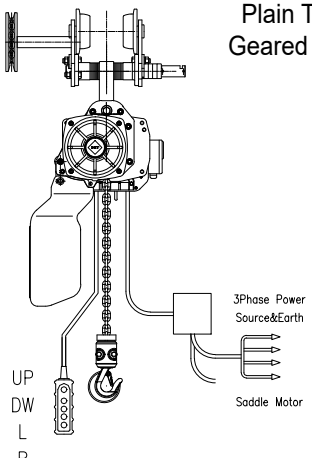

3. Safety Precautions

3.1 Warning and Caution

The Safety Alert Symbol is used in this manual to indicate hazards and to alert the reader to information that should be known, understood, and followed in order to avoid **SERIOUS BODILY INJURY OR DEATH and/or PROPERTY DAMAGE**.

⚠WARNING

WARNING symbol indicates a potentially hazardous situation, which, if not avoided, could result in death or serious injury. To avoid such a potentially hazardous situation, THE OPERATOR SHALL

* NOT operate a damaged, malfunctioning or unusually performing hoist.
* NOT operate the hoist until you have thoroughly read and understand the manual.
* NOT operate a hoist which has been modified without the manufacturer's approval.
* NOT lift more than rated load for the hoist.
* NOT use hoist with twisted, kinked, damaged, or worn load chain.
* NOT use the hoist to lift, support, or transport people, nor lift or transport loads over or near people
* NOT operate unless load is centered under hoist.
* NOT attempt to lengthen the load chain or repair damaged load chain.
* Protect the hoist's load chain from weld splatter or other damaging contaminants.
* NOT operate hoist when it is difficult to form a straight line form hook to hook in the direction of loading.
* NOT use load chain as a sling, or wrap chain around the load.
* NOT apply the load to the tip of the hook or to the hook latch
* NOT apply load unless load chain is properly seated in the chain sheave pockets.
* NOT apply load if bearing prevents equal loading on all load supporting chains.
* NOT operate beyond the limits of the load chain travel.
* NOT leave load supported by the hoist unattended unless specific precautions have been taken.
* NOT allow the load chain or hook to be used as an electrical or welding ground.
* NOT allow the load chain or hook to be touched by a live welding electrode.
* NOT remove or obscure the warnings on the hoist.
* NOT operate a hoist on which the safety placards or decals are missing or illegible.
* NOT operate a hoist unless it has been securely attached to a suitable support.
* NOT operate a hoist unless load slings or other approved single attachments are properly sized and seated in the hook saddle.
* Take up slack carefully – make sure load is balanced and load holding action is secure before continuing
* Shut down a hoist that malfunctions or performs unusually and report such malfunction.
* Make sure hoist limit switches function properly.
* Warn personnel of an approaching load.

⚠CAUTION

Read and understand this manual before using the hoist. Taking precedence over any specific rule, however, is the most important rule of all : “USE COMMON SENSE”

It is the responsibility of the owner / user to

1) Install, inspect, test, maintain, and operate the hoist in accordance with the instruction manual furnished by the manufacturer of the hoist..
2) Train and designate hoist operators, and
3) Train and designate hoist inspector / maintenance personnel
4) Relevant training is needed for operating personnel.
5) The user shall ensure that the operating personnel are given the necessary training
6) The operator shall always work in compliance with the operating instuctions
7) The user shall lift the load from the ground with the minimum speed available at the hoist
   The rope (chain belt) shall be tightended and shall not be in the slack-condition when the load is being lifted from the ground
8) It is forbidden to lift loads above the rated capacity of the hoist
9) Do not try to lift fixed or obstructed loads
10) Do not side-pull loads
11) Excessive inching (e.g. giving short pulses to the motor) shall be avoided
12) Ban on transporting persons

3.2 Name Plate and Labels on Products

All labels and name plate shall be attached on the products at the same position where they were originally attached. Do not allow the labels and name plate to become obstructed or defaced.

<Example of MODEL NO. DSTM-1S>

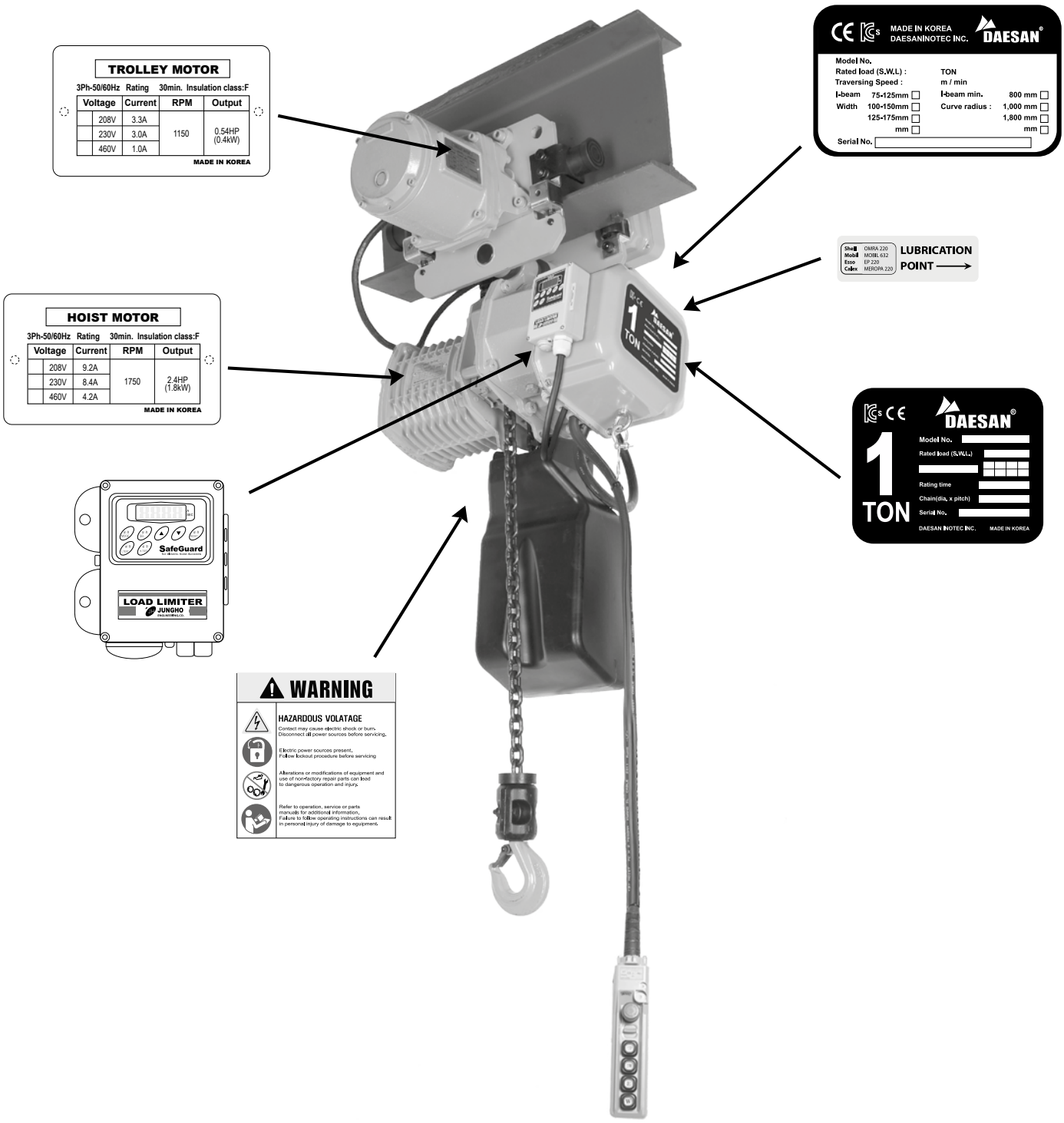

4. Installation

Each complete electric chain hoist is load tested at the factory at 125% of the nameplate-rated capacity.
The service life of the hoist depends on the way it is installed.
Always keep this manual near the hoist. Available to the operator and the person in charge of maintenance.
Make sure that all safety rules are followed.

4.1 Checking of Product

13. Check the product if there is any damage or deformation during the transportation.
14. Check the specification of the hoist you purchase as listed below.
    a. Model no.
    b. Rated capacity (ton)
    c. Lifting length of load chain (feet or meter)
    d. Power supply
    e. Push button pendant assembly (2 button, 4 button, or 6 button)
    f. Specially ordered optional items
    g. Beam width for trolley installation

Store the hoist in its normal operating position without load, away from aggressive atmospheres such as dust or humidity. Make sure that the hoist is always clean and protected from corrosion and is lubricated.

4.2 Installation process

Follow other maintenance procedures outlined in this manual.

1. Handle the hoist by its structure, or by the devices provided for this purpose, or in its original packing.
2. Review the nameplate and warning tags attached to the unit before the installation is started.
3. The hoist should be installed by the technician with the necessary competence.
4. Check that the voltage is in accordance with both the hoist and the voltage at the jobsite (115V, 208V, 230V,380V, 460V Etc.)
5. Make sure that the hoist attaching structure is rigid
6. Make sure that the safety rules are followed for harness, clearance of work areas, posting of instructions to be followed in the area.

4.2.1 Checking of Electricity

⚠WARNING

Before installing, removing, inspection, or performing any maintenance on the hoist, the main switch shall be de-energized and locked out and tagged out.

* Do not use this equipment in hazardous locations.
* The electric chain hoists shall be connected to an earth ground.
* Lock-out and tag-out the main disconnect switch, in the de-energized position, before performing any service on the hoist.
* The customer must supply the power supply cable, the fuses and the main disconnect switch.
* Check that the supply voltage is the same as the nameplate voltage on the hoist.
* Check that the voltage does not vary by more than ±10% from the nominal value.
* Do not use conductors smaller than those listed in the manual, to supply power to the hoist.
* Never bypass limit switches, remove limit switch stops, or otherwise defeat limit switch devices.

4.2.2 Installation of “BOLT with Vent Hole”

DAESAN electric chain hoists are shipped with a “Bolt without Hole” (Solid Bolt) to prevent the possibility of oil leaking during the transportation of the product.
When the temperature of the gear assembly goes up with continued operation, the “Bolt with Vent Hole” (Vent Bolt) relieves the pressure in the gear assembly caused by the increase in temperature.

⚠WARNING

Replacement of Solid Bolt with Vent Bolt

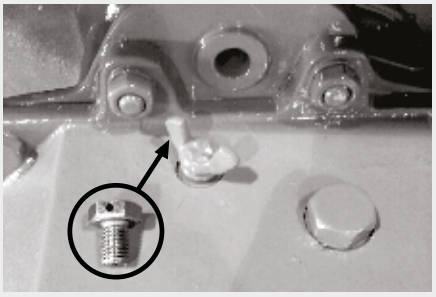

On the hoist, the Solid Bolt is located at the lubrication point. Before the installation of the hoist the customer shall change the bolt from “BEFORE” installation” to “AFTER installation” as shown below.

The Vent Bolt functions as the air ventilation device to relieve pressure created by the increase in temperature from operation of the gearing. It helps prevent damage to the seal packing from high pressure. If NOT changed to “Vent Bolt”, a possible hazardous condition can result due to the high pressure in the gear assembly.

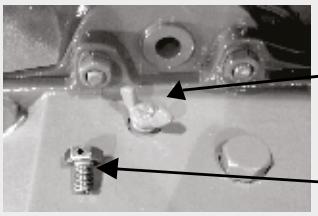

“BEFORE installation”
As shipped, the hoist has a Solid Bolt at the lubrication point to prevent the possibility of oil leaking due to movement in transportation.

“AFTER installation”
With Vent Bolt

4.2.3 Installation of Chain Container to Hoist Body

Lifting height below or equal to 12m (2ton 2chain fall hoist lifting height 6m or below)

1) Place chain box hanger on staybolt
2) Use the chain box hanger pin to fix the chain box on gear and motor side plate hole.

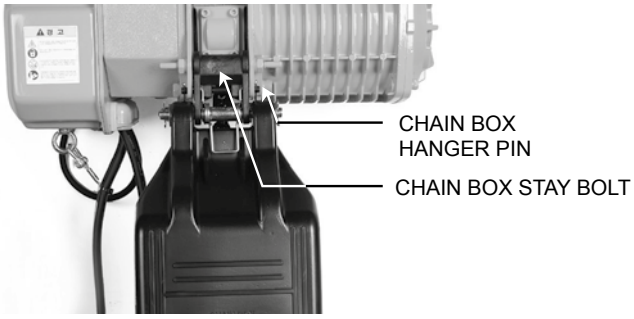

Lifting height over 12m (2ton 2chain fall hoist lifting height over 6m)

1) Insert the load chain into the chain container.
2) Place the container support chain on “Chain box support pin” of Chain Container to secure the container.
3) Insert “Chain box support pin” and lock both ends with the “R pin”
4) Line up chains strait so as not to be twisted.
5) Place the remaining container support chain on the Chain box stay bolt

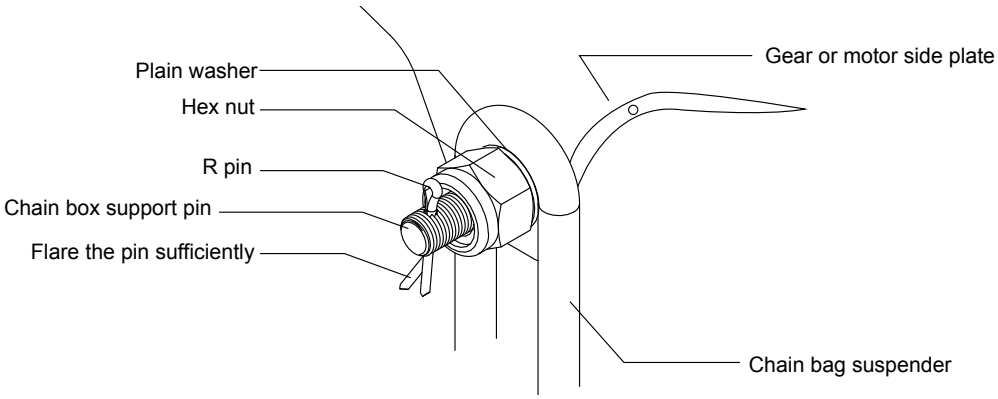

■ Chain Container (Chain Box)

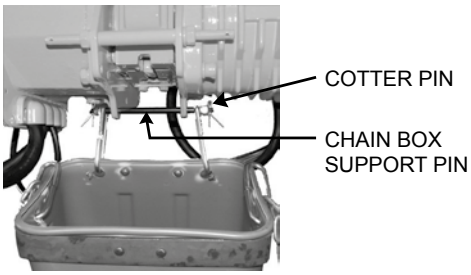

[2-1]

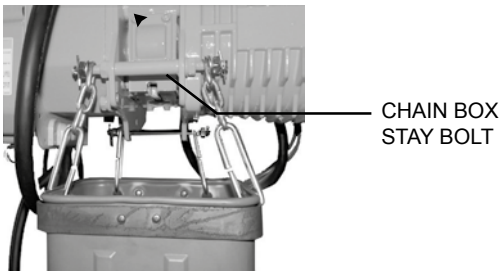

[2-2]

4.2.4 Oil Lubrication on Load Chain and into Chain Container

Please lubricate the load chain, using the plastic oil bottle which is included with the hoist.

NOTICE

Oil Lubrication into Chain Container

After installing the hoist, the oil shall be placed onto the chain and into the chain container (chain bag) before startup.

- If the load chain is used when it's dry, abrasion and noise will result.
- Depending on the oil lubrication, the life of the load chain can vary up to 10 times compared to non-oiled load chain.
- If the load chain is used without oil lubrication before startup, the manufacturer will not be held responsible for possible damage to the load chain

* Maximum Chain-Lift-Length, According to each Chain Container

Longer lifts affect the chain container size. When exceeding the maximum lift specified for a Chain container, it is strictly proihibited to operate the hoist. For a larger size chain container for longer lifts, please contact the factory or authorized dealer for the Steel Chain Container.

Applied Load Chain: Dia x Pitch		Based on 7.1x21mm		REMARK
Capacity (chain-fall reeving)		1T (1fall)	2T(2fall)	
Plastic chain container	PL1	12m	6m	Maximum lift Per chain container
	PCCA	15m	7.5m	
	PCCB	40m	20m	
Steel chain container	SCC1-1	50m	25m	

⚠WARNING

Do not attempt to store more quantity of chain in chain container than that specified in the table. When containing more than the maximum specified quantity, it may result in serious damage to hoist and hazardous conditions to the operator and nearby people or goods.
For the hoist with double chain-falls, the chain container should be installed with the unloaded load chain projecting by about 20 inch (50cm). When the chain container is pushed to the sides by the loads, the load chain may gush out or may not smoothly go through the chain hoist body, posing a danger.

4.2.5 Checking Load Chain after Installation

⚠CAUTION

* Before start-up, the operator shall check the load chain. If it is twisted, it shall not be used until the twist is removed and the chain is straight in line.
* For double chain-falls, a capsized load chain shall not be used. When capsized, the operator shall turn over the bottom hook assembly as shown in the figure. If not, it will cause serious damage to the product.
* On load chain, oil lubrication shall be made with the oil bottle which is included with the hoist. When dry chain with no lubrication is used, it will cause shortened life of the load chain and a possible breakage of the load chain during operation, resulting in damage to the product and/or a hazardous condition to the operator and nearby people or goods.

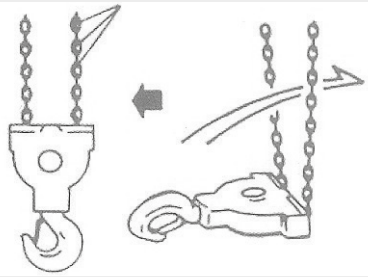

4.2.6 **Incorrect Phase Checking** (by exchanging one of three black lines)

After installation, the operator shall check UP/DOWN motions by pressing the Push Button Pendant Switch If hoist does not operate in the proper UP/DOWN direction, it indicates incorrect phasing of input power supply lines.

NOTICE

Before operation under load, operator shall check hoist operation with push button control. If the hoist operates in the opposite direction of the push button control, phasing of input power supply line is incorrect.

<u>In this case, reverse TWO of the THREE power supply phase lines as illustrated.</u>

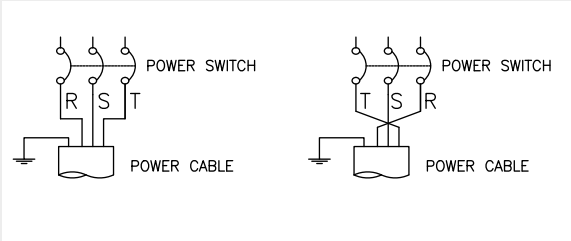

4.3 Installation of the Motorized Trolley Mounted Series

4.3.1 How to Install Trolley on the Runway I-Beam

For Trolley, there are Three types : Motorized trolley, Plain trolley, Geared trolley
First, check the difference between beam flange width and guide roller spacing.

* Parts to Adjust I-Beam Width

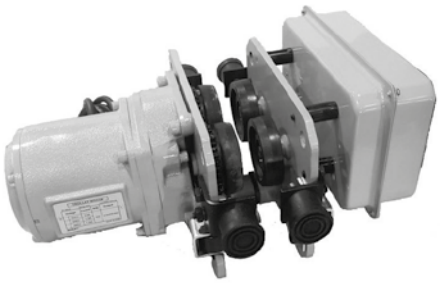

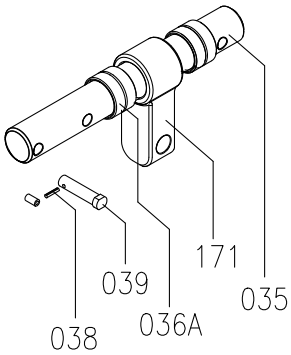

035. Shaft
036A. Adjusting Collar

038. Cotter Pin
039. Stopper Piin
171. Connector

* How to Set Up the I-Beam Width of Motorized Trolley

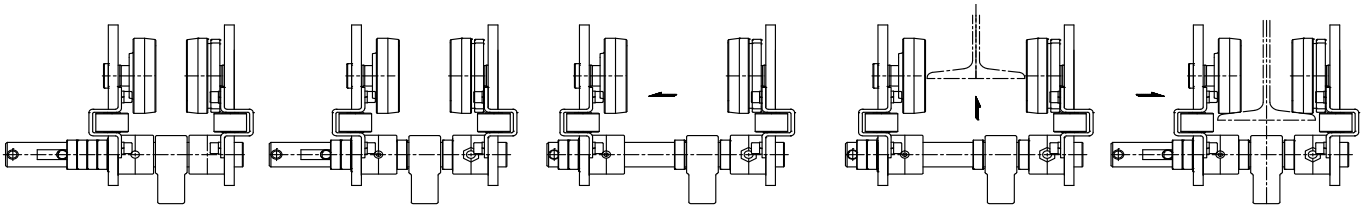

Process ① ② ③ ④ ⑤

Motorized trolley can be used on I-Beams different in width only by inserting adjusting collars (0 pcs to 6pcs.)

① Pull out both ”039. Stopper Pin” and “036A. Adjusting Collar”
② Widen TROLLEY up to the maximum width by pulling out “035. Shaft”
③ In accordance with the following I-Beam width instruction, please insert the applied number of collars and washers at the right end and push the trolley to the direction of arrow mark.
④ Insert TROLLEY on I-Beam.Locate “171. Connector” on the center and line up “036A. Adjusting Collar” by setting the same number of collars and washers at both ends.

* Applied Collar Numbers for Each Trolley Capacity on I-Beam

Each collar width per pcs : 12.5mm

I Beam flange width (mm)		Adjusting Collar Numbers for Each Trolley Capacity		
Each collar width x total numbers	H x B x t1 x t2	0.5T	1T	2T
75mm	150 x 75 x 5.5 x t2	-	-	-
100mm	200 x 100 x 7 x t2	2	2	-
125mm	250 x 125 x 7.5 x t2	4	4	2
150mm	300 x 150 x 10 x t2	-	-	4
175mm	450 x 175 x 11	OPTION		
190mm	600 x 190 x 13	OPTION		

For beam flange widths other than indicated, distribute collars and washers equally on left side and right side so that the total clearance between beam flange and trolley side guide rollers is no less than 1mm and no more than 5mm. A difference of one washer between left side and right side is permissible. No difference in quantity of collars between left side and right side is permissible.

⚠WARNING

RIGHT installation: Fit both sides of the connector with the same number of adjusting collars.

WRONG installation: It can result in serious accidents.

RIGHT Installation

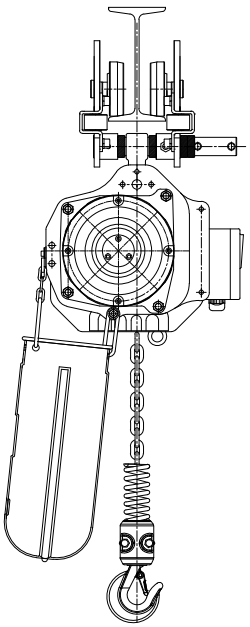

WRONG Installation

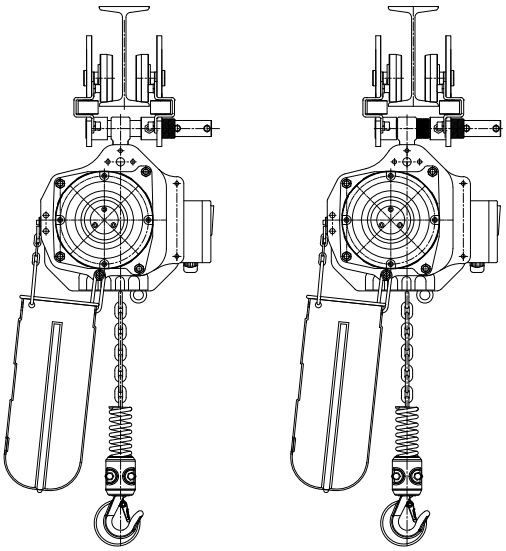

(A) Without collars, the setting of connector become loose and not secure

(B) With one-sided setting of collars, it shall result in the un-balanced trolley installation.

⚠WARNING

(Customer scope for installation)

1. Customer is strongly recommended to install END STOP as this is the customer's responsibility.
   To prevent possible falling of trolley from the runway beam, the customer shall install END STOP as follows.

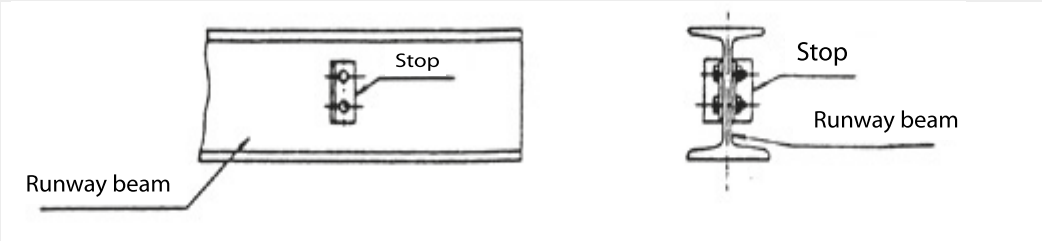

2. For trolley limit switches used as a safety device, they shall be installed in parallel with I-Beam at both ends to detect the runway limit of the end of trolley travel. Please refer to the figure for proper installation.

4.3.2 How to Connect Electric Power Source

("CIS": customer installation scope under customer responsibility)

① In parallel with I-Beam, install the power cable to optimize the trolley movement.

② With each interval of 1.5meter, the cable wheel shall be installed.

③ The minimum allowable curve radius of I-Beam differs with each rated load of hoist.

Please refer to the specification of hoist in manual article no. 1.4.1 Motor Trolley Mounted Series, Single Speed.

4.4 Initial Start-Up

Once these checks have been completed, proceed as follows (be ready to press the emergency stop button at all times)

1. Start operating the hoist without a load
2. Check, when not under load, that the movement of the hook corresponds to the direction of the arrows on the pushbutton station.
3. Check the oeration of the hoist limit switch: operate the hoist, without a load, until it reaches the upper and lower hook positions and let the limiter slip briefly.
4. Check the operation of the brake: lift up a nominal load and then lower it.
5. Perform a load test with ±10% of the nominal load and static tests with ±25% of the nominal load on your installation equipped with our hoist.
6. The hoist which you have just purchased should only be used with a maximum load equal to the hoist's rated load. The length of its useful service life depends on the demands placed upon it the average operating time, the number of start-stops and proper maintenance.

5. Precaution during Operation

⚠CAUTION

Indicates a potentially hazardous situation, which, if not avoided, MAY result in minor or moderate injury. To avoid such a potentially hazardous situation, THE OPERATOR SHALL

1. Perform a daily inspection according to the instruction manual.
2. Inspect the load chain for any type of deformation or damage and check the load chain lubrication.
3. Visually inspect hooks and hook latches for any type of deformation of throat opening, wear on saddle or load bearing point, and twisting.
4. Report missing or illegible warning labels to the supervisor.
5. Not operate the hoist if any damage or malfunctions exist.
6. Know hand signals used for hoist operation as per instruction manual.
7. Always notify others when a load transport is about to begin.
8. Always make sure that the supporting structures are strong enough to support the weight of the load and hoist.
9. Maintain firm footing or be otherwise secured when operating the hoist.
10. Check brake function by tensioning the hoist prior to each lift operation.
11. Use hook latches. Latches are to retain slings, chains, etc. under slack conditions only.
12. Place slings balanced on the bottom hook. Avoid “Improper” slinging cases shown below.

“IMPROPER” SLINGING CASES

13. Make sure the hook latches are closed and not supporting any parts of the load.
14. Make sure the load is free to move and will clear all obstructions.
15. Avoid swinging the load or hook
16. Make sure hook travel is in the same direction as shown on the controls.
17. Inspect the hoist regularly, replace damaged or worn parts, and keep appropriate records of maintenance.
18. Use only manufacturer’s recommended parts when repairing the unit.
19. Lubricate load chain per hoist manufacturer’s recommendations.
20. NOT use the hoist’s overload limiting clutch to measure load.
21. NOT use limit switches as routine operating stops. They are emergency devices only.
22. NOT allow your attention to be diverted from operating the hoist.

23. NOT allow the hoist to be subjected to sharp contact with other hoists, structures, or objects through misuse.
24. NOT adjust or repair the hoist unless qualified to perform such adjustments or repairs.
25. The hoist should be maintained regularly, following the instructions in this manual.
26. Keep the moving components clean and oiled as indicated in this manual.
27. Make sure that the limit switch stops are in place, and that all limit switches are functioning properly…..
28. Before operation, check that the load is correctly fastened and installed on the hook
29. When moving the load, make sure that it is sufficiently raised and distant from the surrounding machines and other objects so as to avoid all obstacles during operation.
30. Make sure that the hoist is vertical to the load before moving it.
31. If manually moving the hoist, push the load.
32. Avoid rocking the load or the hook when using the traveling trolley or crane, by limiting the starting and braking jerks.
33. Use the material under normal working conditions with ambient temperature, atmosphere.
34. Use only for indoor operation of hoist. For outdoor operation, provide adequate protection to ensure a rainproof environment.
35. NOT operate the hoist if any damage or malfunctions exist; and SHALL report any damage or malfunctions to the supervisor.
36. NOT operate the hoist if tagged-out
37. NOT lift, lower, or transport personnel by means of the hoist, hoist trolley, hoist hook, or load.
38. After installation - confirm load chain is well lubricated, not twisted and moves freely into the chain container. This applies to the original installation and anytime the hoist is relocated.

6. Maintenance and Servicing

6.1 Electrical Connection

⚠CAUTION

(Customer responsible scope for installation)

Before removing the control box cover, check that the hoist power supply is disconnected and locked and tagged.

* The customer must supply the power supply cable, the fuses and the main disconnect switch (Refer to the wiring diagram)
* Check that the power supply voltage is correct for the hoist.
* Check that the voltage does not vary by more than ±10% from the nominal value.
* Make sure that the main hoist power disconnect switch is de-energized.
* Do not use conductors smaller than those listed in the manual to supply power to the hoist
* Never bypass limit switches, remove limit switch stops, or otherwise defeat limit switches.

NOTICE

(WHEN INSTALLING SINGLE PHASE)

RECOMMENDED POWER SUPLY WIRE GAGE (COPPER AWG)

	7.5M	15M	23M	30M	45M	60M	75M	90M
115V	12	10	8	6	6	4	-	-
230V	-	16	14	14	12	10	10	8

6.2 Chain Stopper in the Chain Container

The chain stopper for slack fall stop is a safety component, not a functional one. Make sure that the stop is correctly fitted. The chain stopper of non-loaded side must be fixed 3cm (2nd link) from the load chain end as shown in the left figure.

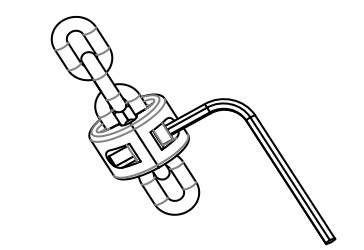

Securely fix using the wrench

At the time of product installation, check chain stopper bolts for tightness. Check chain stopper monthly and tighten socket bolts if required.

6.3 Chain Stopper Rubber Bumper

⚠WARNING

Replace and fix the chain stopper and rubber bumper if any of the below problems occur

- Damage of chain stopper on load or non-load side
- Socket bolts are loosened on load or non-load side
- Damage of rubber bumper on load or non-load side

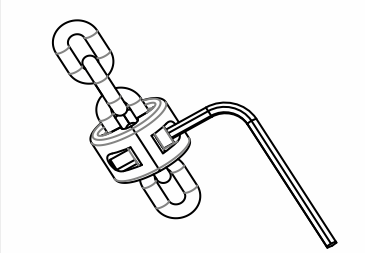

Securely fix using the wrench

Upper chain stopper is a device which shuts down the hoisting operation when the rubber bumper contact the limit switch in the maximum upper position. Lower chain stopper (non-loaded side of chain) must be fixed approximately 3cm (2nd link) from the end of the load chain as shown in the photo above. During installation, securely tighten the chain stopper. Check the tightness of the chain stopper bolts monthly and tighten as required.

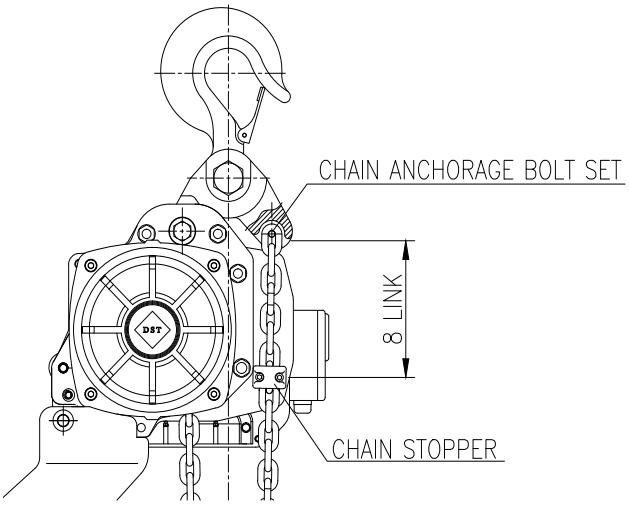

In order for the proper limit switch operation the upper chain stopper for 2t, 2 chain-falls of the load chain should be fixed to 8th link chain from the end of chain anchorage bolt

6.4 Load Chain

⚠WARNING

- ✓ Check if the chain is twisted or not.
- ✓ Never try to use the hoist when the load chains are entangled.
- ✓ Pull the bottom hook to the normal vertical position before use.
- ✓ Never use the lifting chain as sling.
- ✓ Never twist the lifting chain.
- ✓ Do not bundle the chain into the chain bucket.
- ✓ Always keep the chain clean and oiled and check that it is in good condition every day.
- ✓ Only a genuine, manufacturer's chain may be used.

Specification of Load Chain

Load chain : diameter x pitch		6.3 x 19.0	7.1 x 21.0	7.1 x 21.0 SUS
Class, Grade		DAT, He G80 RS		G50K
Surface Hardness		520-620 HV10		MIN 180 HV10
Manuf. Test force min.	KN	31.5	39.6	24.2
Breaking force min.	KN	50	63.5	38.5
Breaking elongation min.	%	10	10	15
Working load limit, 1 fall	kg	500	1000	630
Weight per meter	kg	0.864	1.11	1.11
Dimension (mm)	d	6.3	7.1	7.1
	p	19.0	21.0	21.0
	W1	8.1	8.4	8.6
	W2	21	23.6	24.1

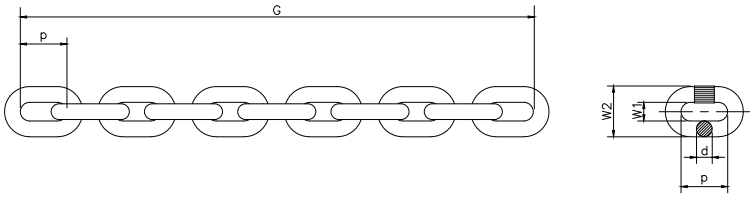

6.5 Measurement of Wear and Replacement of the Load Chain

Dimension of load chain : Dia x Pitch	6.3 x 19.0mm	7.1 x 21.0mm
Minimum link diameter allowed (d) :	6mm	6.8mm
Maximum pitch allowed (p) :	19.57mm	21.6mm
Maximum gage length allowed (G) : (11links pitch measurement)	215.27mm	237.9mm

NOTES : For link diameter, when the wear has increased by more than 5% For pitch, when the wear has increased by more than 3%

Check the load chain for deformation or cracks. In this case, the wear on the chain guide and load sheave

should also be checked and they should be replaced if necessary. If a single link is defective in any way whatsoever, the chain must be replaced. If these limits are exceeded, the chain must must replaced immediately. The gage dimension to be checked shall be measured over 11 links from inside end of link to inside end of link (as shown in figure on previous page).

To remove the chain for 1-fall chain:

a. Remove the load from the hook.
b. Disassemble the hook block.
c. Lower the chain into the chain container.
d. Remove the chain container and unscrew and remove the lower chain guide

To remove the chain for 2-fall chain:

a. Raise the hook block to about 50cm from the hoist body.
b. Remove the chain bucket.
c. Disassemble the fixed point of the chain.
d. Let the rest of the chain slide through the load sheave.

6.5.1 Checking Chain Alignment (the welded part outward from the center)

* Before installation, the welded part position should be checked for safe operation. With the welded part of chain links outward from load sheave or hoist center, the load chain should be aligned before installation. If not aligned correctly outward, it can cause a hazardous condition.

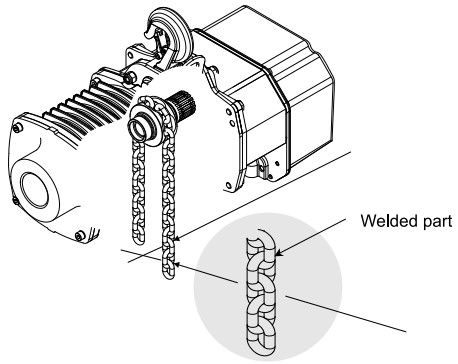

* For the safe operation of load chain, make sure that the bottom hook assembly is not upside down or capsized. In this case, the operator shall restore the chain to normal and make sure the welds on the chain links are in alignment. DO NOT use the hoist with twisted chain. For “Abnormal” case, please turn the bottom hook assembly between the chains to align the load chain.

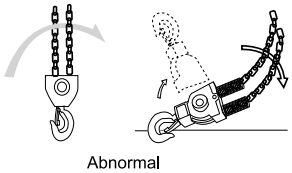

* For the inspection of idler sheave of bottom hook assembly, turn idler sheave by lifting the load chain up and down as per the figure.

6.6 Hook

6.6.1 Measurement of Wear on the Hook (mm)

Capacity	Standard Hook Dimension					For Maintenance (Replacement required)	
	A	B	E	M	N	*Maximum Throat Opening = Nx105%	Minimum Depth = E x 90%
0.5t	79.0	20.0	23.0	34.0	23.5	24.7	20.7
1ton	96.0	24.0	31.5	35.0	23.5	41.5	26.1
2ton	145.5	30.0	44.0	53.5	42.0	41.5	39.6

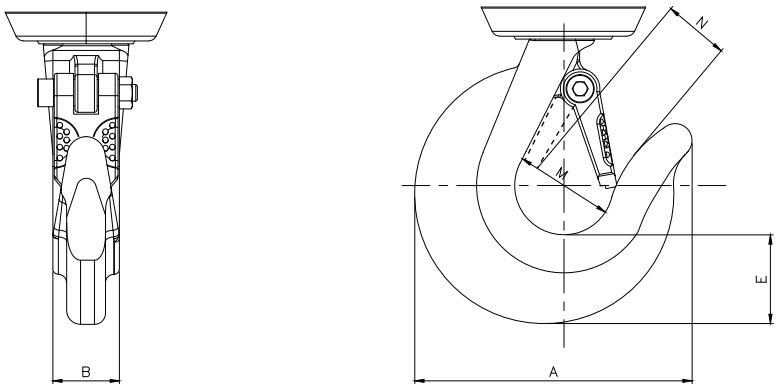

Check hooks for deformation or cracks. Hooks must be replaced if throat opening has increased by more than 5%, or if throat opening has more than 10-degree twist from plane of straight hook.
For the wear on the top hook and the load bottom hook, it shall be checked regularly. Measure the throat opening. If the throat opening exceeds the maximum opening allowed, replace the hook. Damaged safety latches shall be replaced immediately. Measure the section dimension E. If this measurement is less than the minimum allowed, replace the hook.

6.6.2 Chain Anchorage bolt

For the double chain-falls, the bottom hook assembly is fastened together with chain anchorage bolt .
If any deformation is detected, it shall be replaced. Otherwise, the load chain and the hook assembly can fall.

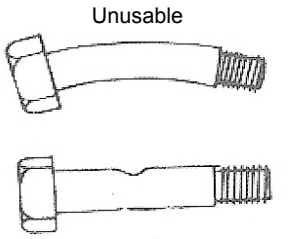

Pin that is bent or pressed is to be replaced.

S12 Anchorage bolt set

6.7 Load sheave and Chain Guide

Load Sheave ensures perfect positioning of the chain with 5 pockets for distribution of the load. Load chain is to be geometrically lined up in accordance with the chain guide and load sheave. Chain guide assures proper engagement of the chain on the load sheave and minimize load chain wear.

6.8 Brake Operation

Please check the slip of chain with load and without load. If there is slip, brake is malfunctioning.

⚠WARNING

Before replacing brake lining, make sure electric power is turned off and load on the hook is removed.

⚠CAUTION

After replacing the brake lining, operate the hoist in the order of without load, with light load and with rated load to check the brake function

■ Inspection of brake lining

Immediately replace the brake lining if brake disc is :

* tainted with oil, grease or other foreign material
* cracked or damaged
* worn to the “to be replaced” figures=> Hoist brake disc less than 2mm

Original dimension of hoist brake disc is 3mm

■ How to Adjust Brake Lining Gap

Remove fixed pin from bearing nut washer and rotate the bearing nut to adjust the brake lining gap. Proper gap is per below chart. Check the reference picture. Rotating the bearing nut clockwise will reduces the gap and will increase the gap when rotated counter clockwise.

Procedure of Replacing Brake Lining

Please refer to attached parts spread view. Loosen the wrench bolt (2) and remove the rotor and brake Part. Loosen the bearing nut and disassemble A1 brake disc, and A3 rotor assembly. Replace A1 brake disc, and adjust the gap between two parts to per below chart. Lubricate the brake disc's inside spline for smooth operation of brake disc. Make sure to check the brake disc operation after replacing.

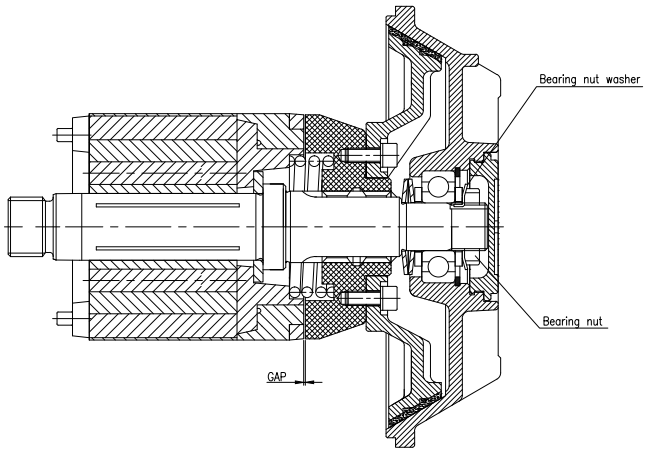

BRAKE GAP	0.8mm	0.7mm
MODEL NO	DSS-0.5S	-
	DSS-1S	DST-1S
	DSS-2W	DST-2W
		EDST-0.5S
		EDST-1S
		EDST-2W
		EDSS-0.5S
		EDSS-1S
		EDSS-2W

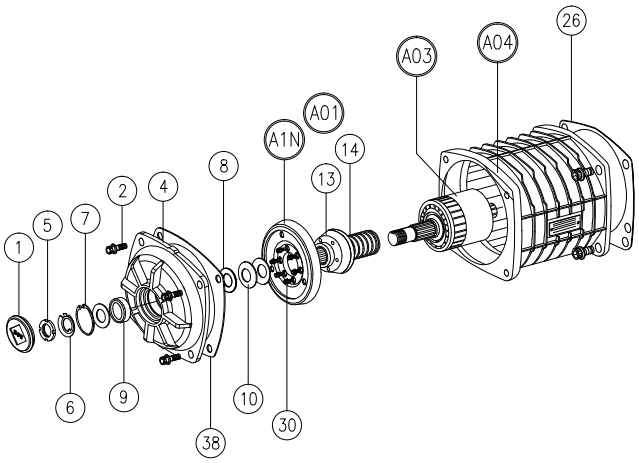

NO	DESCRIPTION	REMARK
A1N	BRAKE DISC ASS''Y	
A01	BRAKE ASS'Y	A1N, 13,30
A03	ROTOR ASS'Y	
A04	MOTOR ASS'Y	

6.9 Motor

Heavy-duty Motor with Overheat Thermal Sensor

High torque and heavy duty hoist motor with insulation class “F”. Frequent operation is efficient with 30min rating (20min. for single phase motor)
With the built-in thermal sensor, it automatically stops the operation to cool down when the motor internal temperature exceeds 130 °C

Type of motor enclosure : TENV

6.9.1 Motor rating of Hoist and Trolley

Phase	MODEL No.	TON	Load Chain Dai (mm)*(chain fall)	Lifting Speed 60/50HZ (m/min)	CONTROL	Output(kw) &Poles	AMP DRAW(V=A)
Three	DST-1S(PT)	1T	7.1 X1	8.2/6.8m/min	CONTACTOR	1.8 X 4P	220=7.4 380=3.9 440=3.4
	DST-2W(PT)	2T	7.1 X2	4.1/3.4m/min			
	EDST-1S(PT)	1T	7.1 X1	2.7~8.2m/min	INVERTER	1.8 X 4P	220=6.9 380=3.7 440=3.2
	EDST-2W(PT)	2T	7.1 X2	1.3~4.1m/min			
	EDSTHM-1S	1T	7.1 X1	2.7~8.2m/min	INVERTER	1.8 X 4P	220=6.9 380=3.7 440=3.2
	EDSTHM-2W	2T	7.1 X2	1.3~4.1m/min			
Single	DSS-0.5S(PT)	0.5T	6.3 X1	8.0/6.7m/min	CONTACTOR	0.8 X 4P	110=19.3 220=9.7
	DSS-1S(PT)	1T	7.1 X1	4.1/3.4m/min			110=24 220=11.8
	DSS-2W(PT)	2T	7.1 X2	2/1.7m/min			
	EDSS-0.5S	0.5T	6.3 X1	1.7~5.2	INVERTER	0.8X 4P	220=6.8
	EDSS-1S	1T	7.1X1	1.7~5.2		1.8 X 4P	220=8.0
	EDSS-2W	2T	7.1 X2	1.0~2.6		1.8 X 4P	
Phase	**MODEL No.**	**TON**		**Travel Speed (m/min)**	**CONTROL**	**Output(kw) &Poles**	**AMP DRAW(V=A)**
Three	DSTM-1S	1T		15/12m/min	CONTACTOR	0.4 X 6P	220 =3.3 380=1.8 460=1.5
	DSTM-2W	2T					
	EDSTHM-1S	1T		5.2~15.2m/min	INVERTER	0.4 X 6P	220 =3.3 380=1.8 460=1.5
	EDSTHM-2W	2T					
Single	DSSM-0.5S	0.5T		11m/min	CONTACTOR	0.2 X 8P	110=7.8 220=3.9
	DSSM-1S	1T					
	DSSM-2W	2T					
	MT-1 (1Ph)	1T					
	MT-2 (1Ph)	2T					
	EDSSM-0.5S	0.5T					
	EDSSM-1S	1T					
	EDSSM-2W	2T					

6.10 Overwinding & Overload Limiter

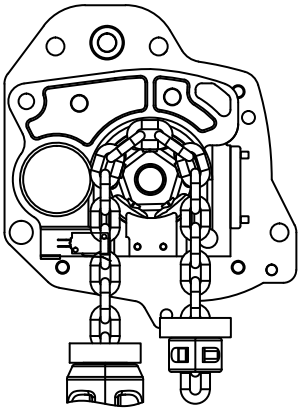

- When the hoist reaches the upper limit position (high hook), the chain stopper will engage the upper limit switch, shutting down the lifting motion. The hoist will still be able to lower once this limit switch is activated.
- Friction Clutch-If abnormal operation or slippage occurs do NOT attempt to disassemble or adjust the Friction Clutch. Replace the worn or malfunctioning Friction Clutch assembly with a new, factory adjusted part.

MODEL NO. DSS-0.5S, DSS-1S, DSS-2W

MODEL NO. DST-1S, DST-2W
EDST-1S, EDST-2W
EDSS-0.5S, EDSS-1S, EDSS-2W

6.11 Push Button Pendant Switch

Rain-proof, IP64 protection, with 2,4 or 6 buttons, all models are equipped, with Emergency Stop Function.
Easy to operate and designed with 110VAC control voltage. It is compact to enable easy one-handed sure grip control. The push button cable is provided with built-in strain relief to help prevent cable damage.

6.12 Overload Alert Sound Limiter (Protector) Audible “beeping’ sound(Optional Device)

When the hoist is overloaded with more than 110% of the rated load, it signals an audible alert to the operator. When the alert “beeping” sounds, the Up-motion will not operate but the DOWN motion will operate so the overload can be lowered.

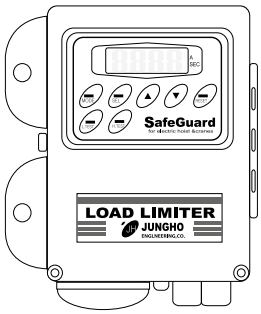

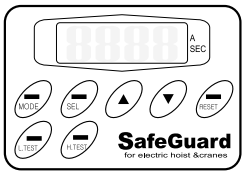

Key legend	Function
LED(display)	Indicates the running current of motor and the overload status.
MOD(mode)	Is used for inputting or memorizing date. Mode key cannot be controlled outside of the box. When using, open the plastic cover and operate inside the box panel.
SEL(selection)	Is for position selection of the required setting value or number.
▲UP ▼DOWN	Both keys are used to change or check the setting value or number.
RESET	In case of operator’s manual control after the overload or motor or the testing, the RESET key makes the reset of RELAY after TRIP from overloading.
“L” Test “H” Test	Both keys are used for testing the operation of high or low speed.

⚠WARNING

Do Not open the outer enclosure. The stored value of the overload limiter shall NOT be changed or modified by anyone other than the manufacturer or an authorized agent. The value inscribed on the overload limiter is the optimal number and value for the hoist, changing this setting can cause equipment damage or personal injury. The manufacturer is not responsible for damage, injury, or death resulting from unauthorized tampering with this device.
The outer enclosure of the overload limiter is sealed by the manufacturer to ensure the alert warning enclosure is not opened.

■ Description for the inside Panel of Overload alert Limiter (How to modify the setting figures)

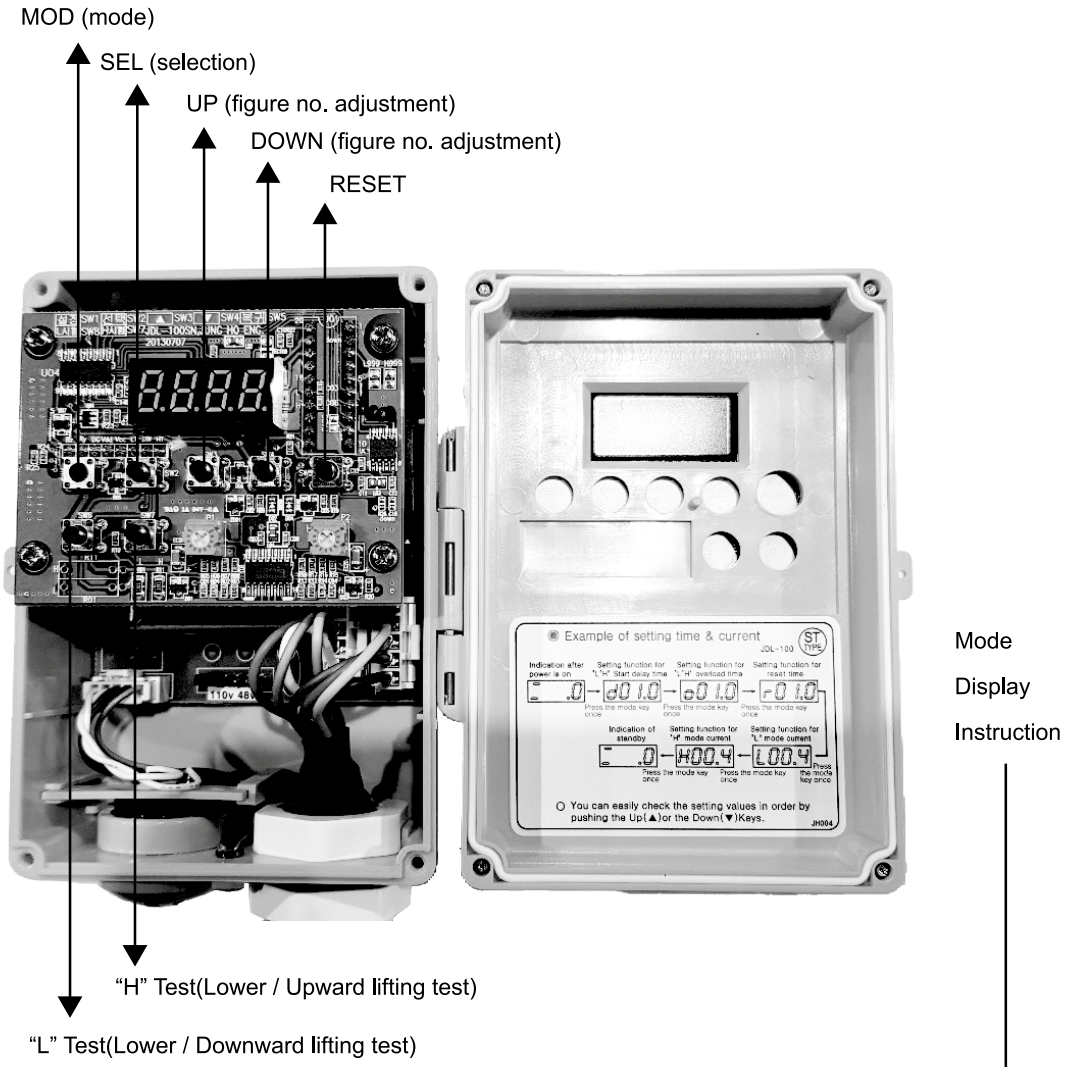

Mode Display Instruction

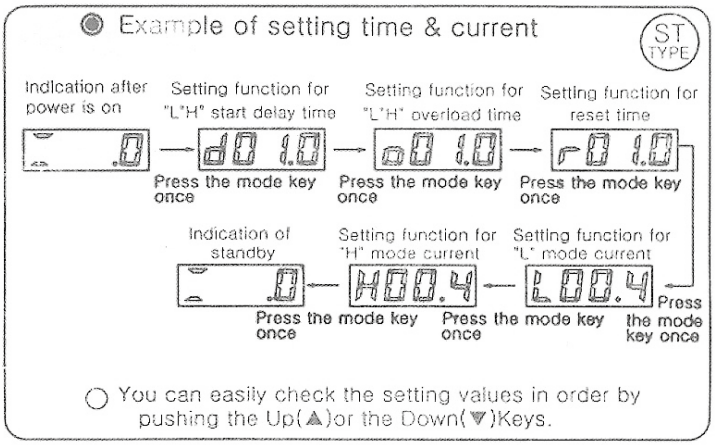

6.12.1 Features

1. Reset time and time delay are stored in the Microcomputer. The overload limiter will allow the hoist to be lowered when the overload limiter is actuated.
2. Detail adjustment is available and the time current can set digitally.
3. The setting is simplified and does not require measuring instruments. Motor current is displayed on the screen during operation.
4. The wiring is simplified by use of an exterior C.T
5. Service is simplified because the main control P.C.B is a “plug-in” type.

■ **MOD (mode) DISPLAY :**

By pressing the inside panel button, it is possible to modify. From the outside of box, it is not available to modify the figures.

Step	Functions	Unit figures	Display Example	Reference
Step 1. ⇩	Power on		0	As the basic setting mode, it is displayed at the time of power-on. it is displayed at the time of power-on
Step 2. ⇩	Start delay time:	second	d0 1.0	On the start operation, it allows One(1) second to protect from the excessive current flow.
Step 3. ⇩	Overload time:	second	o0 1.0	When overloaded, it allows One(1) second to cross check the instant over-current.
Step 4. ⇩	* "L" Test "H" Test	ampere	L00.4 & H00.4	It indicates motor current on "Lower / Downward lifting" operation. It indicates motor current on "Higher / Upward lifting" operation
Step 5. ⇩	Power on		0	As the basic setting mode, it is displayed at the time of power-on. it is displayed at the time of power-on.

Notes: “L” test is only available for Dual Speed Chain Hoist.

For single Speed Chain Hoist, please set the number of “L” test as the same of “H” test number

NOTICE

For the setting of each function, set the display to H by pressing MOD key. Then press the key one more time.

When a beep sounds, the display will show STANDBY status and the input memorization of the setting is complete.

You can easily check the setting values in order by pushing ▲ **UP** ▼ **DOWN** keys.

6.12.2 How to arrange “Mode Setting”

Mode setting figures for overload alert limiter (60hz, single speed)

MODEL NO	CAPACITY CHAINFALL	STANDARD RATING				Recommended setting figures of overload limiter (according to each MODE setting steps)								
		Motor Output Kw (hp)	Current(ampere)			STEP1 start Delay time	STEP2 overload Time	STEP3 reset Time	STEP4 “H” (high) Mode current			STEP5 “L” (low) Mode current		
						(ampere)			(ampere)			(ampere)		
			220v	380v	440v				220v	380v	440v	220v	380v	440v
DST, M-1S DST,M-2W	1T, 1 chain fall 2T, 2 chain fall	1.8(2.4)	7.4	3.9	3.4	1.5	1.5	1.5	7.6	4.1	3.6	7.2	3.7	3.2
EDST,M-1S EDST,M-2W	1T, 1 chain fall 2T, 2 chain fall	1.5(2.0)	6.9	3.7	3.2	1.5	1.5	1.5	7.6	4.1	3.6	6.7	3.5	3.1
			220v	110v					220V	110V		220V	110V	
DSS,M-0.5S DSS,M-1S DSS,M-2W	0.5T, 1 chain fall	0.8(1.1)	9.7	19.3		1.5	1.5	1.5	9.9	19.5		9.5	19.1	
	1T, 1 chain fall		11.8	24					12	24.2		11.6	23.8	
	2T, 2 chain fall			24						24.2			23.8	
EDSS,M-0.5S EDSS,M-1S EDSS,M-2W	0.5T, 1 chain fall	1.5(2.0)	6.8	N/A		1.5	1.5	1.5	7.0	N/A		6.6	N/A	
	1T, 1 chain fall		8.0						8.2			7.8		
	2T, 2 chain fall													

Notes : “L” (low) mode is only used for Dual Speed Chain Hoist. The figures have no effect on Single Speed Chain Hoists.
For Single speed Chain Hoist, please set the number of “L” (low) mode the same as “H” (high) mode number.

Mode setting figures for overload alert limiter (50hz, single speed)

MODEL NO	CAPACITY CHAINFALL	STANDARD RATING				Recommended setting figures of overload limiter (according to each MODE setting steps)								
		Motor Output Kw (hp)	Current(ampere)			STEP1 start Delay time	STEP2 overload Time	STEP3 reset Time	STEP4 “H” (high) Mode current			STEP5 “L” (low) Mode current		
						(ampere)			(ampere)			(ampere)		
			220v	380v	440v				220v	380v	440v	220v	380v	440v
DST, M-1S DST,M-2W	1T, 1 chain fall 1T, 1 chain fall	1.8(2.4)	7.4	3.9	3.4	1.5	1.5	1.5	6.4	3.8	3.8	6.4	3.8	3.8
EDST,M-1S EDST,M-2W	2T, 2 chain fall 2T, 2 chain fall	1.5(2.0)	6.9	3.7	3.2	1.5	1.5	1.5	9.0	5.2	4.5	6.4	3.7	3.2
			220v						220V			220V		
DSS,M-0.5S DSS,M-1S DSS,M-2W	0.5T, 1 chain fall	0.8(1.1)	9.7	N/A		1.5	1.5	1.5	9.9	N/A		9.5	N/A	
	1T, 1 chain fall		11.8						12			11.6		
	2T, 2 chain fall													
EDSS,M-0.5S EDSS,M-1S EDSS,M-2W	0.5T, 1 chain fall	1.5(2.0)	6.8	N/A		1.5	1.5	1.5	7.4	N/A		6.5	N/A	
	1T, 1 chain fall		8.0						9.0			6.4		
	2T, 2 chain fall													

If the supplying voltage at the job site has big difference from hoist rated voltage, the overload limiter may not function properly In that case, overload limiter setting may need to be adjusted.

⚠WARNING

- Only authorized person(s) of the person shall service the electric load limiter.
- This device is composed of digitally controlled circuits. When programming changes are made by unauthorized personnel, it can allow the equipment to be overloaded and result in equipment damage, personal injury, or death.
- Before installing this device, be sure to read this instruction manual carefully

6.12.3 Assembling figure

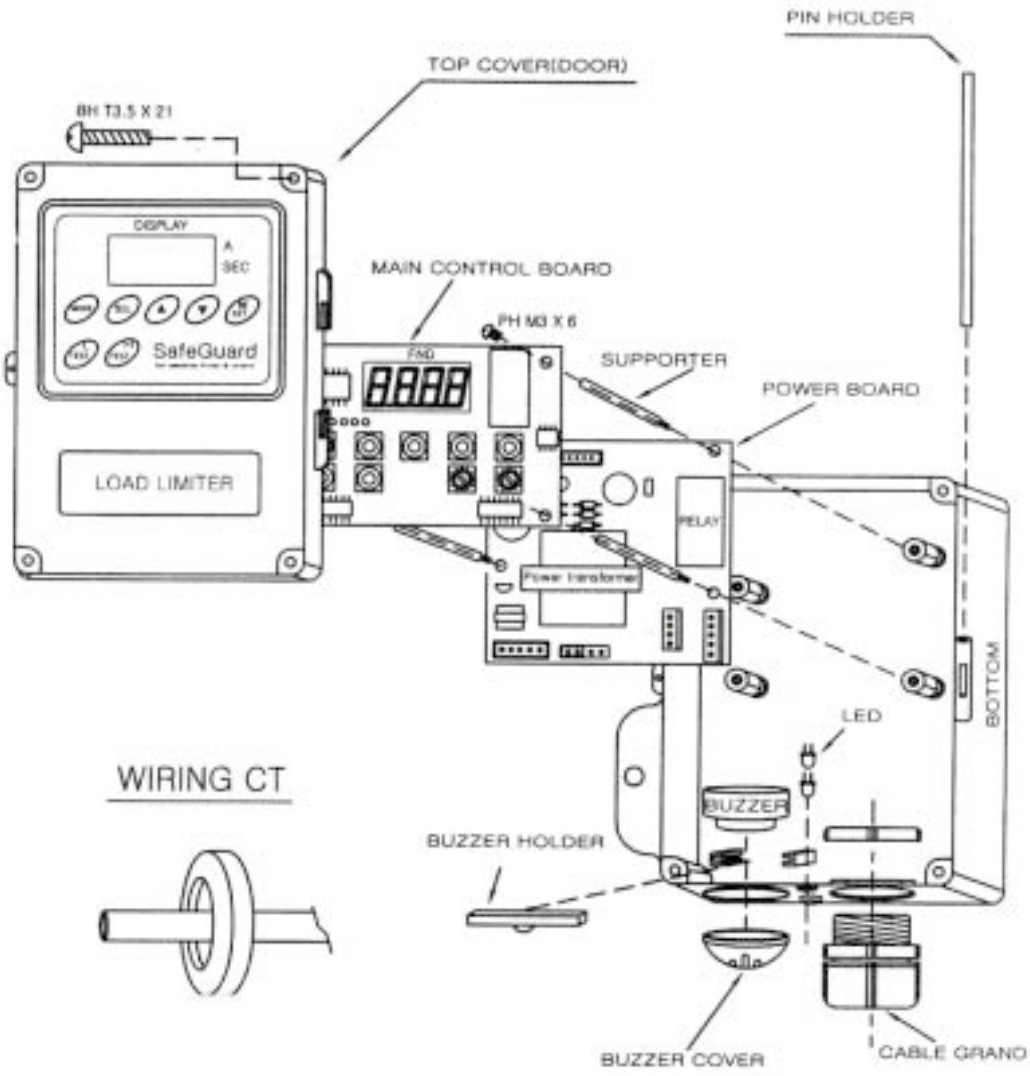

Specification label

CONTROL VOLTAGE	□ AC 48V	□ AC 110V	
	□ AC 220V	□ AC V	
F R Q	50/60 Hz	CAPACITY OF CONTACTING POINT	5A/250V AC
CURRENT	□ 0.8~ 99.9A	□	
TIME	0.1~25.0 SEC	CONSUMING POWER	1.0VA
SER. NO.	EX -		PAT NO. 0267456. 0240833

⚠WARNING

When being operated under the circumstances where input power is frequently turned ON/OFF or is turned OFF for long time, the value of data memorized might be initialized. This matter might cause error operation when overloaded. Please keep in mind that the accident caused by error operation endangers person's life.

☞ Be sure to carefully read this manual before use.

7. Preventive Maintenance

7.1 Recommended Periodic Maintenance and Inspection Table

Check	Interval	Qualification of the customer's personnel
Brake operation	Daily	Operator
Visual inspection of the chain	Daily	Operator
Suspension of the control box by the steel wire	Daily	Operator
Cleanness and lubrication of the chain	Monthly	Operator
Limiter operation	Monthly	Operator
Measuring of the wear on the chain	Every 3 months	Operator
Measuring of the wear on the hooks	Every 3 months	Operator
Tightening of the hook block screws	Every 3 months	Operator
Checking of the locking plate screws	Every 3 months	Operator
Lubrication of the idler sprocket	Annually	Operator
Checking of the screw tightening torques and checking of signs of corrosion	Annually	Qualified mechanic
Adjustment of the limiter and brake	Annually	Qualified mechanic
Lubrication of the gears	Please refer to below lubrication	

7.2 Lubrication

Lubrication point	Possible brands	Quantity & Applied model no.	
Chain	Chain lubrication fluid	As required	
Gears	SHELL OMALA 220 MOBIL MOBILGEAR 630 ESSO SPARTAN EP EP 220 CALTEX MEROPA 220	0.8 liter	0.5ton (chian-fall reeving 1) 1ton (chain-fall reeving 1) 2ton (chain-fall reeving 2)

7.3 Recommended Technical Support for Various Spare Parts

Spare part	To be replaced by	Qualification of the personnel
Upper chain guide	Authorized manufacturer personnel	Qualified mechanic
Output shaft	Authorized manufacturer personnel	Qualified mechanic
Gearing (1st/2nd stage)	Authorized manufacturer personnel	Qualified mechanic
Other sealing and O-rings	Authorized manufacturer personnel	Qualified mechanic
Electric box	Authorized manufacturer personnel	Qualified mechanic
PC-board	Authorized manufacturer personnel	Qualified mechanic
Brake system	Customer	Qualified mechanic
Chain	Customer	Qualified mechanic
Chain container (chain bag)	Customer	Qualified mechanic
Chain stopper	Customer	Qualified mechanic
Suspension hook	Customer	Qualified mechanic
Hook assembly	Customer	Qualified mechanic
Fuses	Customer	Qualified mechanic

7.4 Troubleshooting

Problem	Cause	Solution
The chain hoist does not work	The emergency stop button is activated	Deactivate it
	Main switch is off	Turn it on
	Poor contactor of push button	Replace push button control
Hoist motor malfunction	Check power cable, terminal and push button switch contact	Repair or replace
	Noise on motor and over current flow	It is overloaded. Operate hoist within rated capacity
	Noise on motor and over heat	Check fuse, voltage, or connection of 3 phase power
The Travel direction does not correspond to that indicated on the push button	The power supply is incorrectly connected	Change two phases of the power supply
Brake Malfunction	Wear on brake lining	Check and replace brake lining
	Slip	Contact qualified technician
Electric Leakage	Electric flow on hoist body and chain	Check connection to an earth ground Check insulation resistance Check moisture on push button and dry
Abnormal noises while the load is being moved	The chain components are not lubricated	Lubricate the chain components
	Chain is worn	Replace it
	Load sheave or chain guide is worn	Replace the sheave or chain guide
	Idler sheave is worn	Replace it
	A supply phase is missing	Check the connection of the phases

Once the hoist has been used for the FEM class duration, all of the components must be checked by and authorized agent or by the manufacturer. The hoist should no longer be used. Unless agreement is obtained from the authorized agent or the manufacturer.

For discarding chain hoist. Please remove all greases and oils from the hoist.

8. Parts Illustrations

8.1 Exploded View of CLH HOIST Parts

(DSS-0.5S, DSS-1S, DSS-2W)

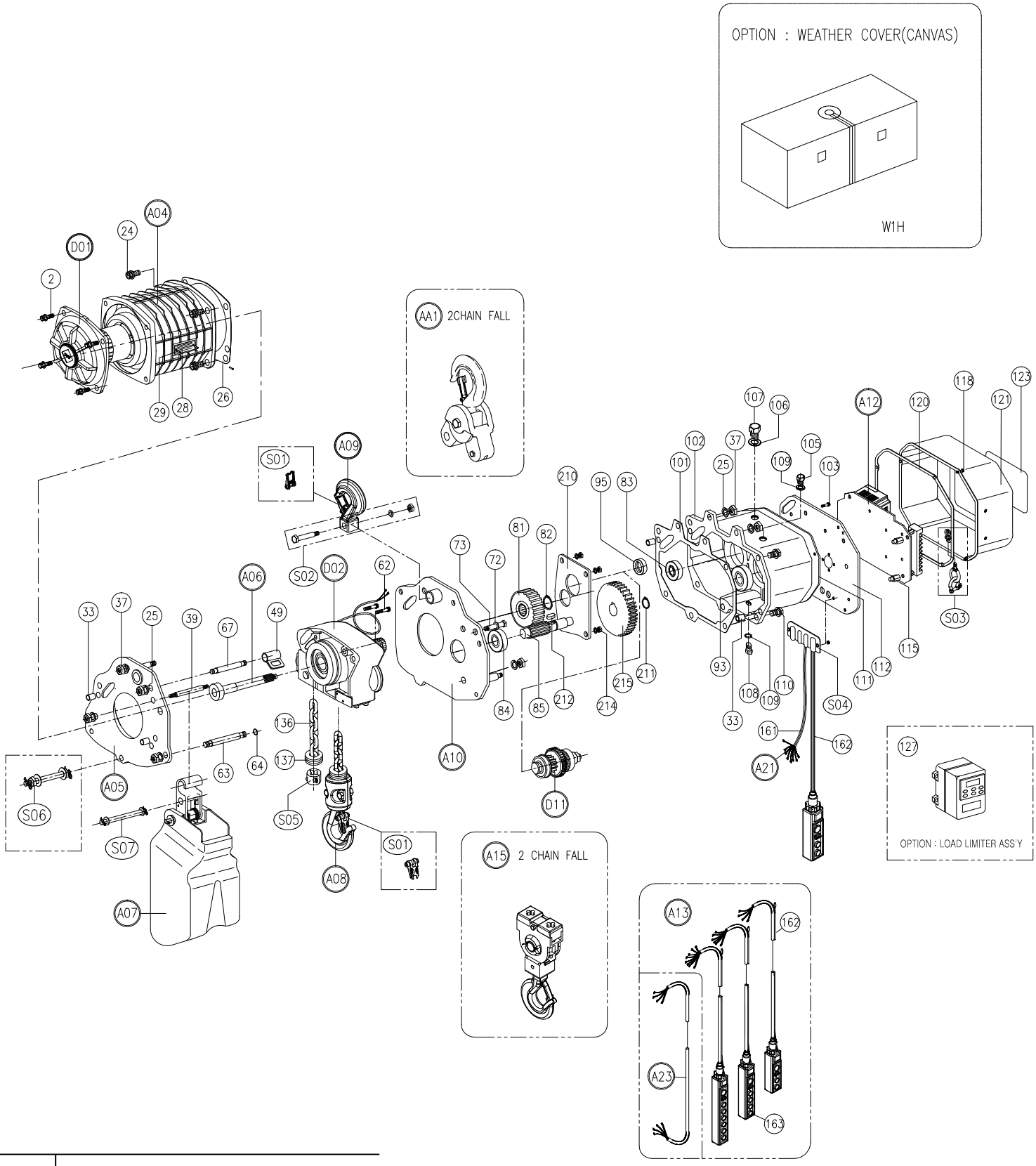

8.2 Exploded View of CLH HOIST Parts

(DST-1S, DST-2W & EDST-1S, EDST-2W, EDSS-0.5S, EDSS-1S, EDSS-2W)

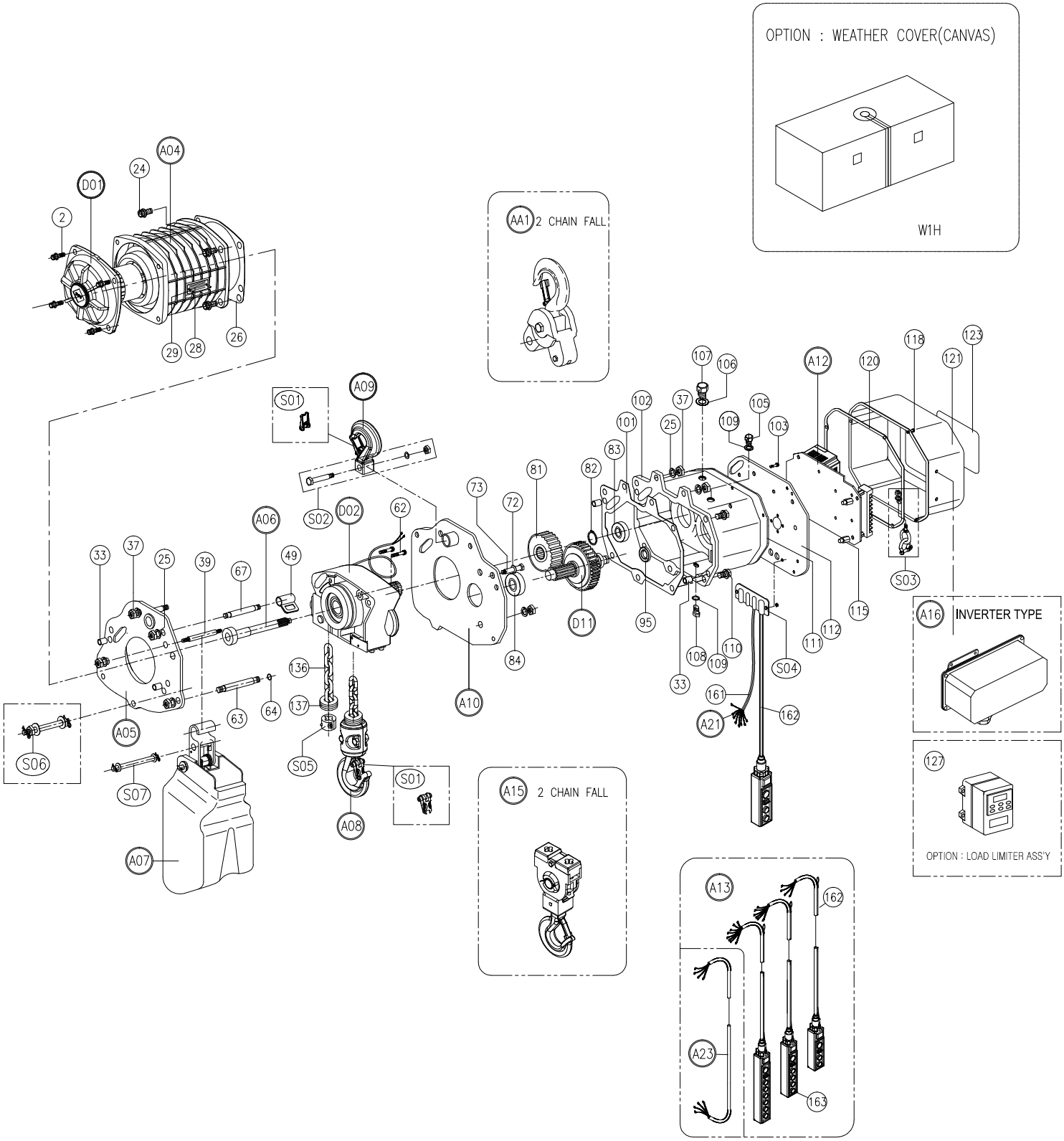

8.3 Exploded View of Trolley Parts

(DSTM-1S, DSTM-2W & EDSTM-1S, EDSTM-2W & DSSM-0.5S, DSSM-1S, DSSM-2W & EDSSM-0.5S. EDSSM-1S, EDSSM-2W)

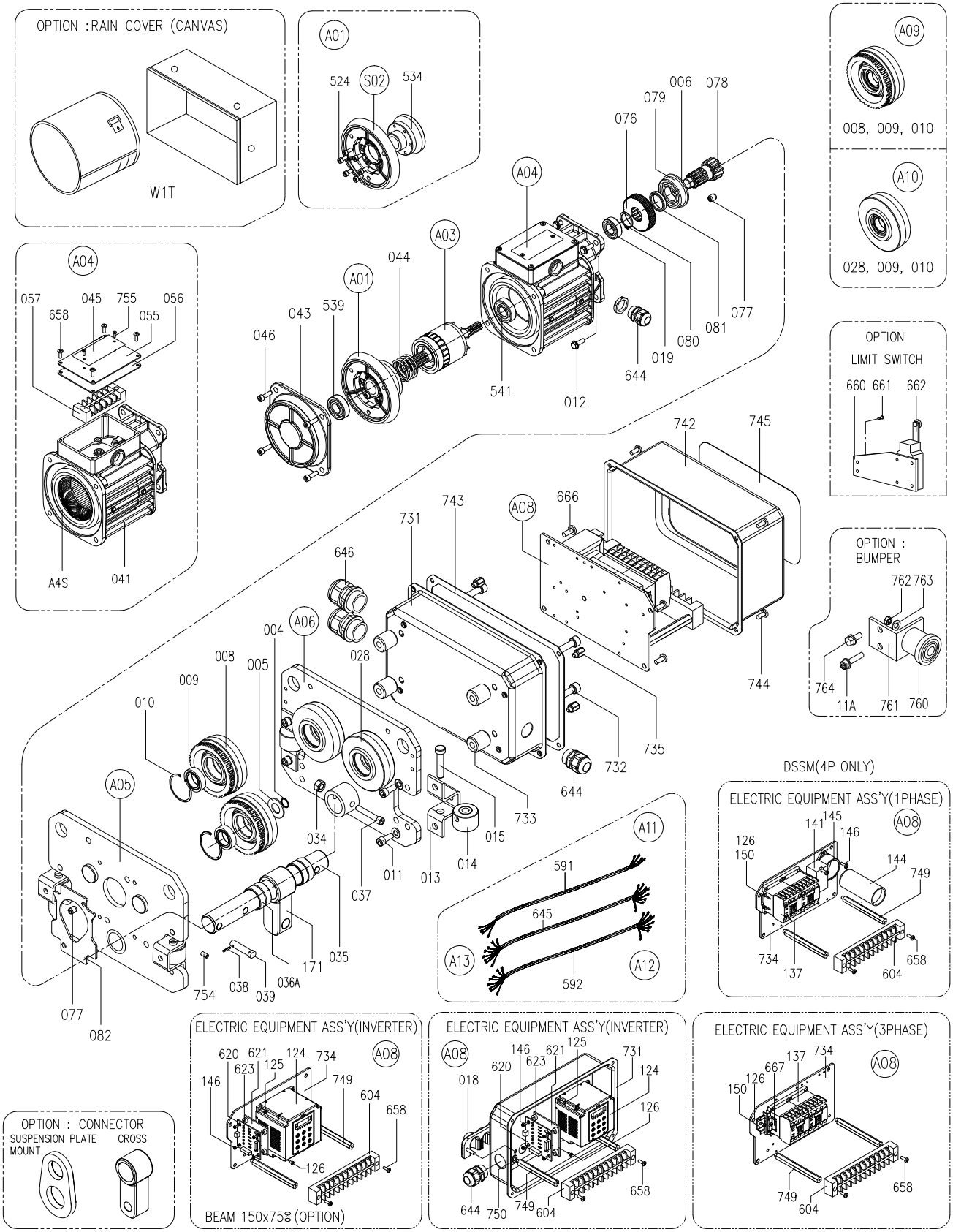

8.3 Exploded View of Trolley Parts (8P)

(DSSM-1S, DSSM-2W)

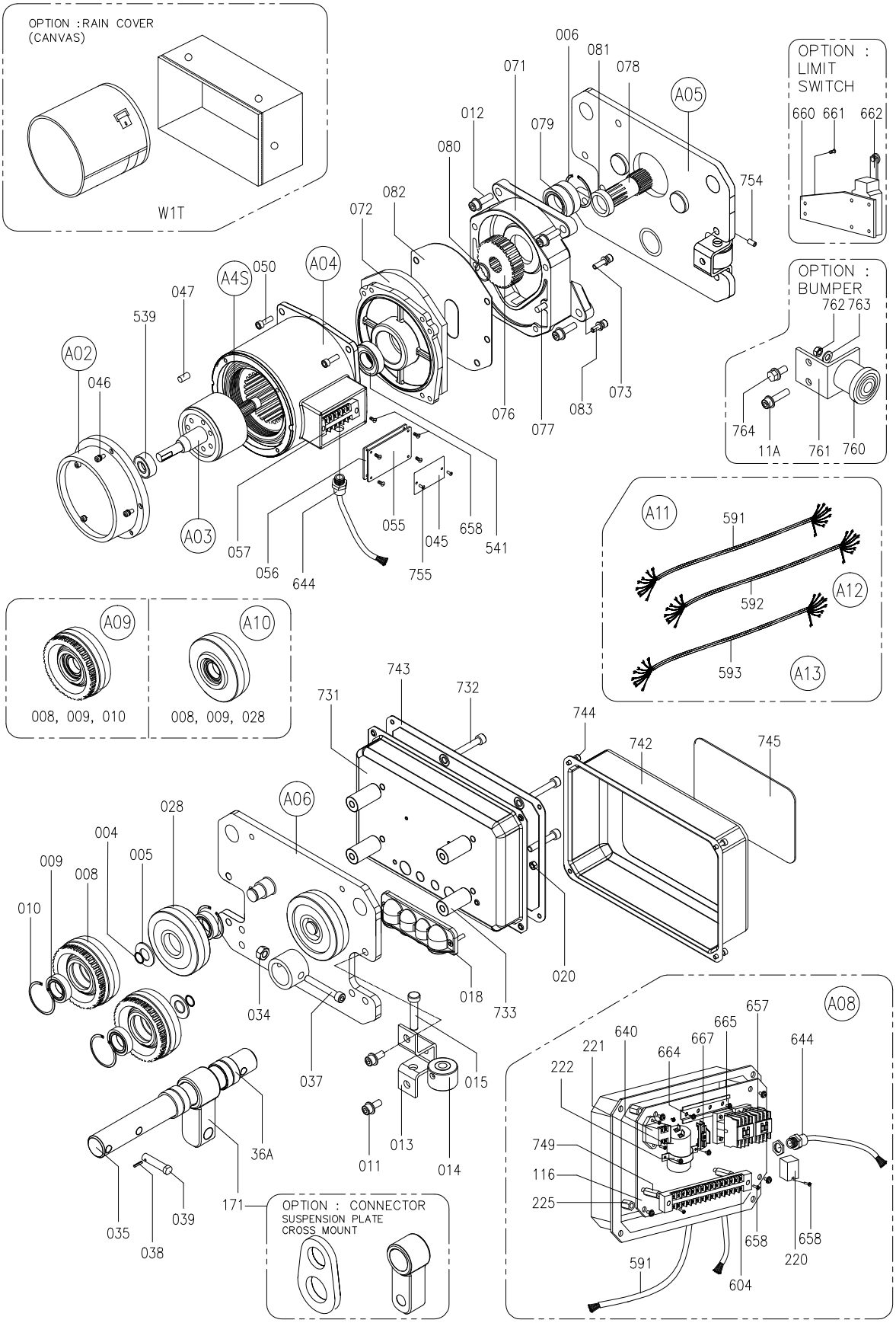

8.4 Exploded View of Low Headroom Hoist

(EDSTHM-1S, EDSTHM-2W)

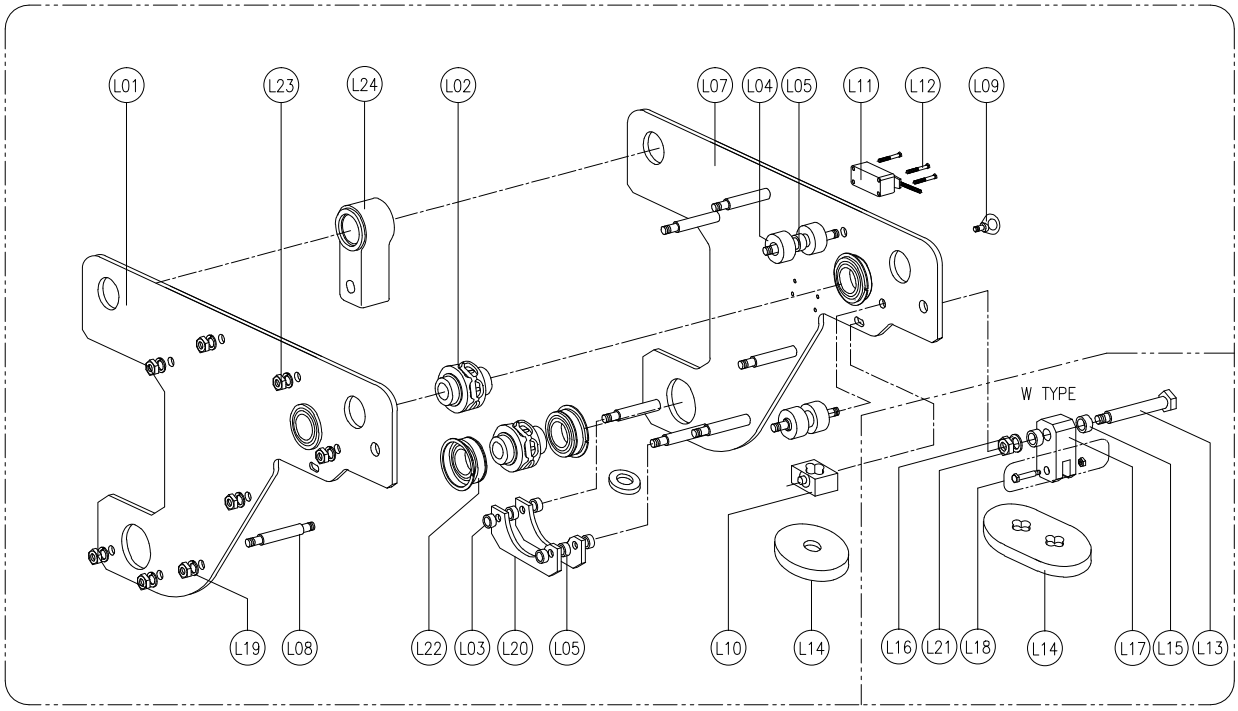

8.5 Exploded View of Lug Mount Plain Trolley Kit 0.5, 1. 2 ton Capacity

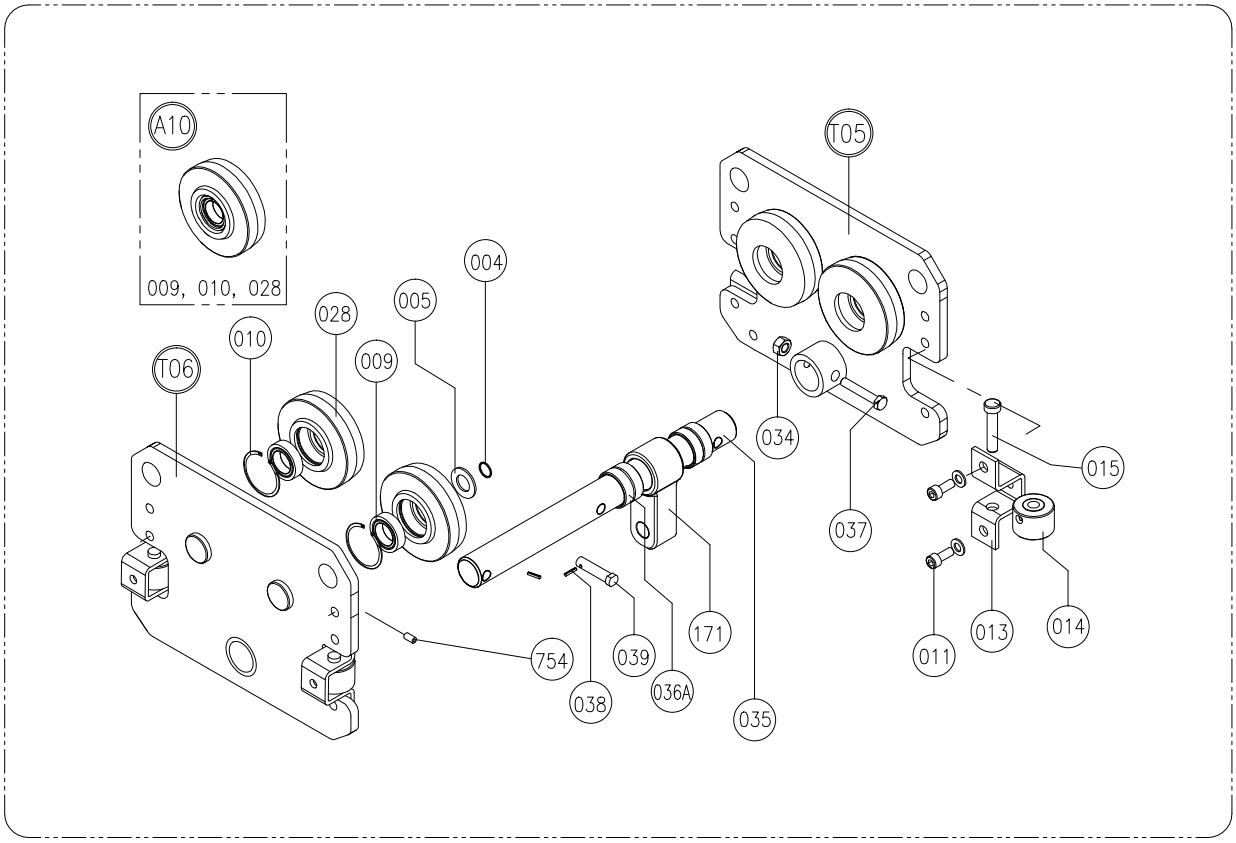

8.6 Exploded View of Assembled Parts

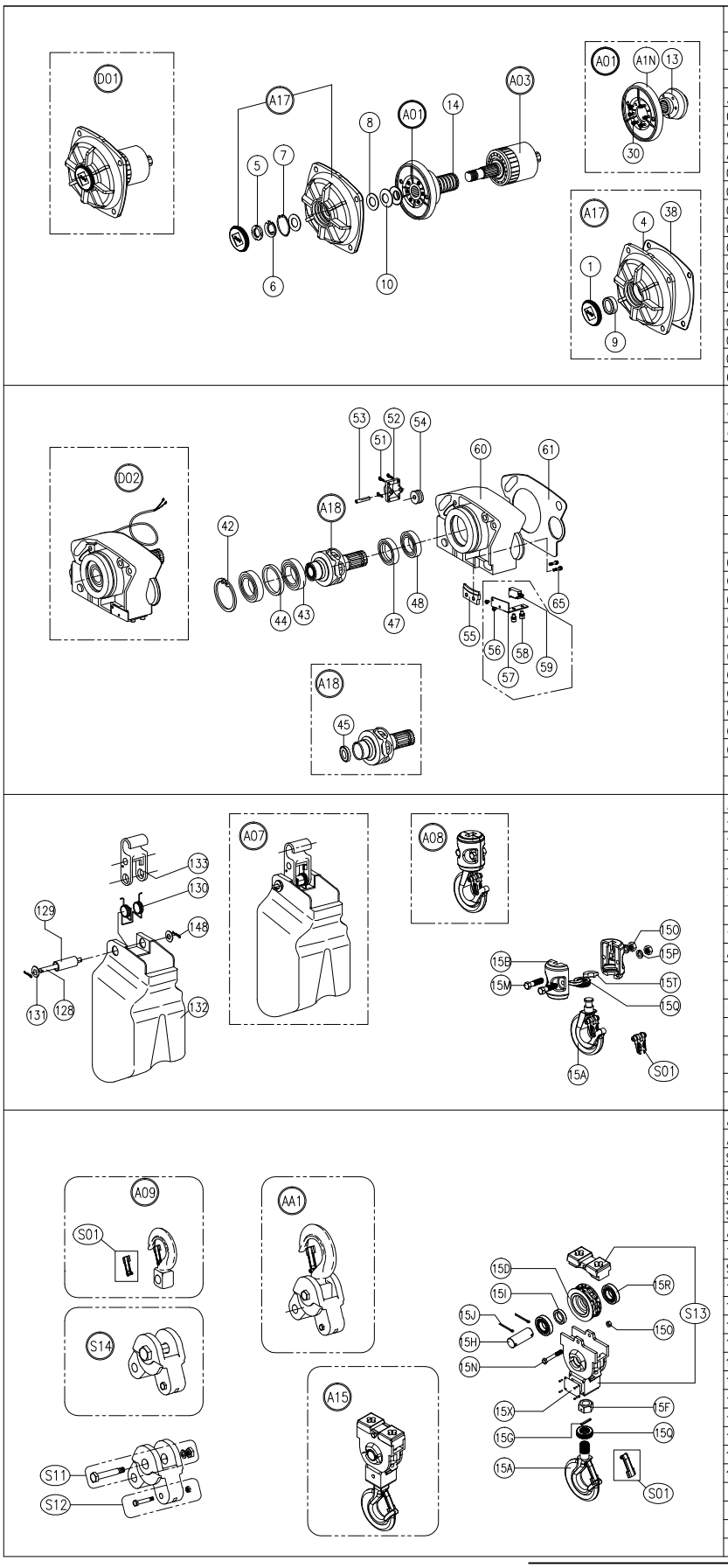

NO	DESCRIPTION	QT'Y	REMARKS
D01	FULL ROTOR ASS'Y	1	
D01	FULL ROTOR ASS'Y	1	1 PH VFD
A01	BRAKE ASS'Y	1	
A1N	BRAKE DISC ASS'Y	1	
013	MOVING CORE	1	
030	WRENCH BOLT S/W	6	M6x15
A03	ROTOR ASS'Y	1	
005	LOCK NUT	1	AN04
006	LOCK WASHER	1	AW04
007	SNAP RING	1	R-47
008	PLAIN WASHER	2	21x33x4
010	CLUTCH SPRING	2	
014	BRAKE SPRING	1	
014	BRAKE SPRING	1	1 PH VFD
A17	BRAKE COVER ASS'Y	1	
001	PACKING CAP	1	
004	BRAKE COVER	1	
009	BALL BEARING	1	6204DD
038	PACKING BRAKE COVER	1	
D02	CHAIN GUIDE ASS'Y	1	
042	SNAP RING	1	R-80
043	BALL BEARING	2	6208ZZ
044	CHAIN GUIDE COLLAR	1	
A18	LOAD SHEAVE ASS'Y	1	
045	OIL SEAL	1	21x32x8
047	OIL SEAL	1	45x68x12
048	BALL BEARING	1	6008ZZ
051	WRENCH BOLT S/W	4	M6x18
052	ROLLER COVER	1	
053	ROLLER PIN	1	
054	ROLLER	1	
055	STRIPPER	1	
056	MACHINE SCREW	2	M4x10
057	M/S BRACKET	1	
058	HEX BOLT S/W	2	M6x10
059	LIMIT SWITCH	1	
060	CHAIN GUIDE	1	
061	PACKING CHAIN GUIDE	1	
065	WRENCH BOLT S/W	2	M5x25
A07	CHAIN CONTAINER ASS'Y	1	
128	CHAIN CONTAINER HANGER PIN	1	
129	STAY PIPE	1	
130	RETURN SPRING	1	
131	PLAIN WASHER	2	M12
132	CHIAN CONTAINER	1	
133	CHAIN CONTAINER HANGER	1	
148	R PIN	2	R12
A08	BOTTOM HOOK & BLOCK ASS'Y	1	
15A	BOTTOM HOOK WITH LATCH	1	
S01	SAFETY LATCH SET	1	
15B	BOTTOM HOOK COVER	2	
15Q	THRUST BEARING	1	51104
15T	SPLIT RING	2	
15M	HEX BOLT	2	M8x35
15P	SPRING WASHER	2	M8
15O	HEX NUT	2	M8
AA1	TOP HOOK AND ARM ASS'Y	1	
A09	TOP HOOK WITH LATCH	1	
S14	ARM ASS'Y	1	
S01	SAFETY LATCH SET	2	
S11	CONNECTING BOLT SET	1	M16
S12	ANCHORAGE BOLT SET	1	M8
A15	BOTTOM HOOK & BLOCK ASS'Y	1	
15A	BOTTOM HOOK WITH LATCH	1	
S13	BOTTOM HOOK LOAD BLOCK SET	1	
15D	IDLE SHEAVE	1	
15F	BOTTOM HOOK NUT	1	M20
15G	SPRING PIN	1	ø4x35
15H	IDLE SHAVE PIN	1	
15I	IDLE SHEAVE COLLAR	1	
15J	COTTER PIN	2	ø4x40
15N	HEX BOLT	1	M8x70
15O	U NUT	1	M8
15Q	THRUST BEARING	1	51205
15R	ROLLER BEARING	2	NF204
15X	HOOK NAME PLATE	1	

8.7 Exploded View of Electric Parts

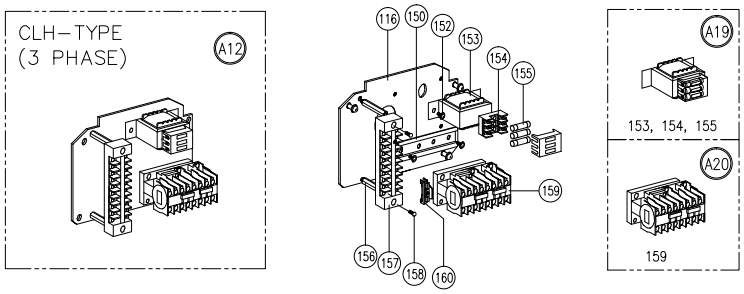

NO	DESCRIPTION	QT'Y	REMARKS
A12	ELECTRIC EQUIPMENT ASS'Y(MAGNETIC)	1	
A19	TRANSFORMER ASS'Y(110V)	1	
A19	TRANSFORMER ASS'Y (48V)	1	
A20	MAGNETIC CONTACTOR ASS'Y	1	
116	ELECTRIC EQUIPMENT BOARD	1	
150	CHANNEL	1	
152	MACHINE SCREW S/W P/W(L)	4	M4x8
153	TRANSFORMER	1	
154	FUSE HOLDER	3	
155	FUSE	3	
156	HEX STAY PIN	2	
157	TERMINAL BLOCK	1	
158	MACHINE SCREW S/W	2	M4x12
159	MAGNETIC CONTACTOR	2	
160	CHANNEL STOPPER	1	

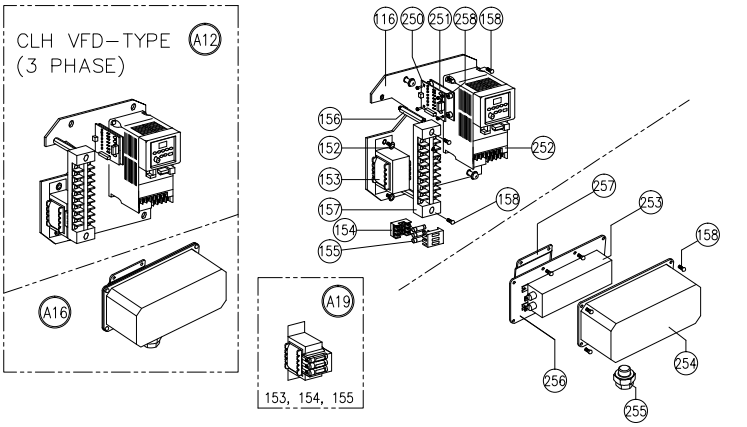

NO	DESCRIPTION	QT'Y	REMARKS
A12	ELECTRIC EQUIPMENT ASS'Y(INVERTER)	1	
A16	BRAKING RESISTANCE ASS'Y	1	
A19	TRANSFORMER ASS'Y(110V)	1	
A19	TRANSFORMER ASS'Y (48V)	1	
116	ELECTRIC EQUIPMENT BOARD	1	
152	MACHINE SCREW S/W P/W(L)	4	M4x8
153	TRANSFORMER	1	
154	FUSE HOLDER	3	
155	FUSE	3	
156	HEX STAY PIN	2	
157	TERMINAL BLOCK	1	
158	MACHINE SCREW S/W	6	M4x12
250	INTERFACE	1	
251	INTERFACE BOARD	1	
252	INVERTER(230V)	1	
	INVERTER(460V)	1	
253	BRAKING RESISTANCE	1	
254	BRAKING RESISTANCE COVER	1	
255	CABLE HOLDER	1	
256	BASE PLATE	1	
257	BRACKET	1	
258	PCB SUPPORT BAR	4	

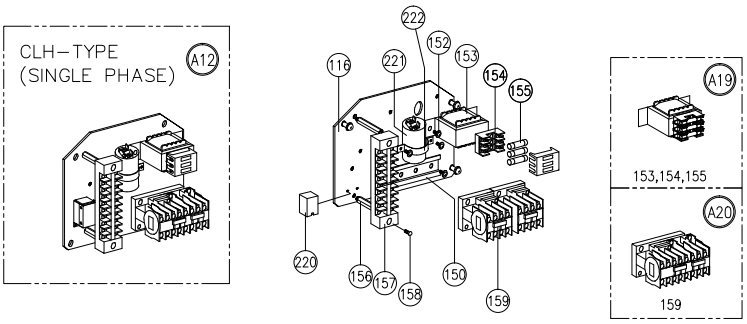

NO	DESCRIPTION	QT'Y	REMARKS
A12	ELECTRIC EQUIPMENT ASS'Y(MAGNETIC)		
A19	TRANSFORMER ASS'Y(110V)	1	
A19	TRANSFORMER ASS'Y(48V)	1	
A20	MAGNETIC CONTACTOR ASS'Y	1	
116	ELECTRIC EQUIPMENT BOARD	1	
150	CHANNEL	1	
152	MACHINE SCREW S/W P/W(L)	4	M4x8
153	TRANSFORMER	1	
154	FUSE HOLDER	3	
155	FUSE	3	
156	HEX STAY PIN	2	
157	TERMINAL BLOCK	1	
158	MACHINE SCREW S/W	2	M4x12
159	MAGNETIC CONTACTOR	2	
220	START SWITCH	1	
221	CAPACITOR	1	
222	SADDLE ASS'Y	1	

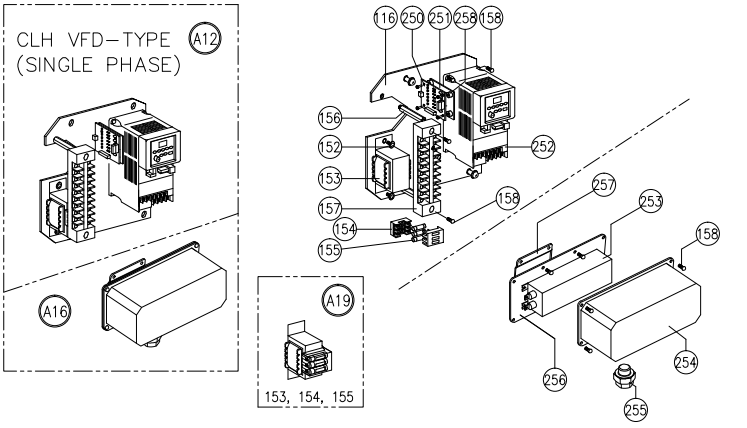

NO	DESCRIPTION	QT'Y	REMARKS
A12	ELECTRIC EQUIPMENT ASS'Y(INVERTER)	1	
A16	BRAKING RESISTANCE ASS'Y	1	
A19	TRANSFORMER ASS'Y(110V)	1	
A19	TRANSFORMER ASS'Y(48V)	1	
116	ELECTRIC EQUIPMENT BOARD	1	
152	MACHINE SCREW S/W P/W(L)	4	M4x8
153	TRANSFORMER	1	
154	FUSE HOLDER	3	
155	FUSE	3	
156	HEX STAY PIN	2	
157	TERMINAL BLOCK	1	
158	MACHINE SCREW S/W	6	M4x12
250	INTERFACE	1	
251	INTERFACE BOARD	1	
252	INVERTER	1	
253	BRAKING RESISTANCE	1	
254	BRAKING RESISTANCE COVER	1	
255	CABLE HOLDER	1	
256	BASE PLATE	1	
257	BRACKET	1	
258	PCB SUPPORT BAR	4	

8.8 Exploded View of Food Grade Hoist (DSTF, EDSTF- Type)

NO	ASSEMBLED PARTS	NO	ASSEMBLED PARTS	NO	ASSEMBLED PARTS
A01	A1N, 13, 30.	A12(DSS)	116, 150, 151, 152, 153, 154, 155, 156, 157, 158, 159.	D02	A18, 042, 043, 044, 047, 048, 051, 052, 053, 054, 055, 056,
A1N	11, 12.		220, 221, 222, 750		057, 058, 059, 060, 061, 065
A02	17, 21.	A13	162, 163.	S01	15E, 15K, 15L, 15S.
A03	A02, 18, 20.	A09(2W)	S01, 1A	S02	34, 70, 71.
A04	A4S, 22, 23, 26, 27.	A15(2W)	S01, S13, 15D, 15F, 15G, 15H, 15I, 15J, 15N, 15O, 15Q.	S03	122, 124, 125, 247.
A05	35, 36.		15R, 15X.	S04	113, 114.
A06	40, 41.	A17	1, 4, 7, 9, 38.	S05	145, 146
A07	128, 129, 130, 131, 132, 133, 148.	A18	45, 46.	S06	842, 850, 851, 852
A08	S01, 15A, 15B, 15M, 15O, 15P, 15Q, 15T.	A19	153, 154, 155.	S07	134, 135.
A09	S01, 1A	A20	159.	S11	175, 176, 177
A10	35, 68.	A23	162.	S12	179, 180
A11	90, 91.		OPTION PARTS	S13	181, 190
A12 (DST)	116, 150, 151, 152, A19, 156, 157, 158, 159, 750.	W1H	W1H	S14	178, S11, S12.
A12(EDST,S)	116, 152, A19, 156, 157, 158, 250, 251, 252, 750.	D01	A01, A03, A17, 2, 5, 6, 8, 10, 14.	S15	85, 86, 87, 88, 89, 92, 93, 94, 95, 96, 97, A11.

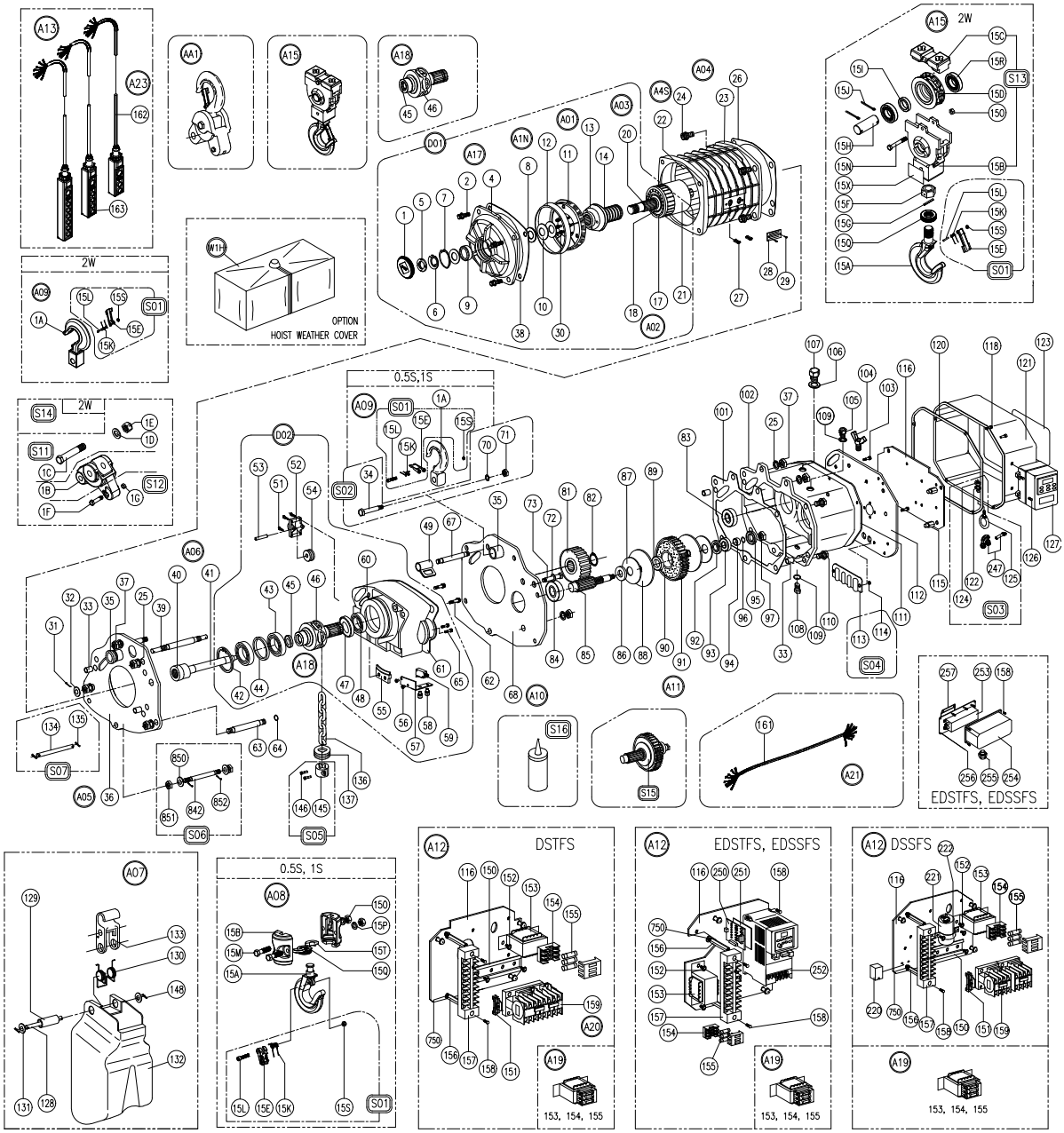

8.9 Part List (DSTFS, EDSTFS-1S, 2W)

NO	DESCRIPTION	NO	DESCRIPTION	NO	DESCRIPTION	NO	DESCRIPTION
1	PACKING CAP	67	STAY BOLT B	135	R PIN		EDST PART
2	WRENCH BOLT S/W	68	GEAR SIDE PLATE	136	LOAD CHAIN	116	ELECTRIC EQUIPMENT BOARD
4	BRAKE COVER	70	SPRING WASHER	137	BUMPER	250	INTERFACE
5	LOCK NUT	71	U-NUT	15A	BOTTOM HOOK	251	INTERFACE BOARD
6	LOCK WASHER	72	PACKING STOPPER BOLT	15B	BOTTOM HOOK COVER	252	INVERTER
7	SNAP RING	73	STOPPER BOLT	15M	HEX BOLT	253	BRAKING RESISTANCE
8	PLAIN WASHER	15L	WRENCH BOLT	15O	HEX NUT	254	BRAKING RESISTANCE COVER
9	BALL BEARING	15E	SAFETY LATCH	15P	SPRING WASHER	255	CABLE GLAND
10	CLUTCH SPRING	15K	SAFETY LATCH SPRING	15Q	THRUST BEARING	256	BASE PLATE
11	BRAKE DISC	1A	TOP HOOK	15T	SPLIT RING	257	BRAKING RESISTANCE BRACKET
12	BRAKE DISC LINING	15S	U-NUT	145	CHAIN STOPPER	258	INTERFACE SUPPORTER
13	MOVING CORE	81	4TH GEAR	146	WRENCH BOLT		
14	BRAKE SPRING	82	SNAP RING	148	R PIN		
17	MAGNETIC CORE	83	BALL BEARING	150	CHANNEL		
18	PLAIN WASHER	84	BALL BEARING	151	CHANNEL STOPPER		
20	ROTOR SHAFT	85	3RD GEAR	152	MACHINE SCREW S/W P/W		ASSEMBLY(DST&EDST)
21	ROTOR CORE	86	COLLAR D	153	TRANSFORMER	A01	BRAKE ASS'Y
22	STATOR CORE	87	CLUTCH SPRING	154	FUSE HOLDER	A1N	BRAKE DISC ASS'Y
23	MOTOR CASE	88	CLUTCH DISC	155	FUSE	A02	PULL ROTOR ASS'Y
24	WRENCH BOLT S/W	89	GUIDE COLLAR	156	HEX STAY PIN	A03	ROTOR ASS'Y
25	SPRING WASHER	90	2ND GEAR LINING	157	TERMINAL BLOCK	A04	MOTOR ASS'Y
26	PACKING MOTOR CASE	91	2ND GEAR	158	MACHINE SCREW S/W	A4S	STATOR ASS'Y
27	SPRING PIN	92	COLLAR C	159	MAGNETIC CONTACTOR	A05	MOTOR SIDE PLATE ASS'Y
28	MOTOR NAME PLATE	93	BALL BEARING	161	POWER CABLE	A06	1ST GEAR ASS'Y
29	RIVET	94	COLLAR A	162	PENDANT CABLE	A07	CHAIN CONTAINER ASS'Y
30	WRENCH BOLT S/W	95	OIL SEAL	163	PENDANT	A08	BOTTOM HOOK ASS'Y
31	R PIN	96	ORING			A09	TOP HOOK ASS'Y
32	PLAIN WASHER	97	U-NUT			A10	GEAR SIDE PLATE ASS'Y
33	SPRING PIN	101	PACKING GEAR CASE	222	SADDLE	A11	2ND GEAR ASS'Y
34	TOP HOOK PIN	102	GEAR CASE	1A	TOP HOOK	A12	ELECTRIC EQUIPMENT ASS'Y(DST)
35	SUPPORT BOSS	103	WRENCH BOLT S/W	1B	ARM	A12	ELECTRIC EQUIPMENT ASS'Y(EDST)
36	MOTOR SIDE PLATE	104	OIL PLUG(!"#$)	1C	CONNECTING BOLT	A12	ELECTRIC EQUIPMENT ASS'Y(DSS)
37	HEX NUT	105	AIR HOLE BOLT	1D	PLAIN WASHER	A13	PENDANT ASS'Y
38	PACKING BRAKE COVER	106	PACKING OIL PLUG	1E	U-NUT	A14	TOP HOOK ASS'Y - 2W
39	CHAIN CONTAINER STAY	107	OIL PLUG	1F	CHAIN ANCHORAGE BOLT	A15	BOTTOM HOOK ASS'Y - 2W
40	1ST GEAR JOINT	108	HEX BOLT	1G	U-NUT	A16	BRAKING RESISTANCE ASS'Y
41	1ST GEAR	109	ORING	15A	BOTTOM HOOK	A17	BRAKE COVER ASS'Y
42	SNAP RING	110	HEX BOLT S/W	15B	BOTTOM HOOK COVER	A18	LOAD SHEAVE ASS'Y
43	BALL BEARING	111	PACKING BOARD	15C	BOTTOM HOOK CHAIN GUIDE	A19	TRANSFORMER ASS'Y
44	CHAIN GUIDE COLLAR	112	ELECTRIC COMPONENT BOARD	15D	IDLE SHEAVE	A20	MAGNETIC CONTACTOR
45	OIL SEAL	113	CORD HOLDER	15E	SAFETY LATCH	A21	POWER CABLE ASS'Y
46	LOAD SHEAVE	114	HEX NUT	15F	BOTTOM HOOK NUT	A23	PENDANT CABLE ASS'Y
47	OIL SEAL	115	HEX STAY PIN	15G	SPRING PIN		%&' PART ASS'Y
48	BALL BEARING	116	ELECTRIC EQUIPMENT BOARD	15H	IDLE SHAVE PIN	AA1	TOP HOOK & ARM ASS'Y
49	HANGER HOLDING METAL	118	HEX BOLT S/W	15I	IDLE SHEAVE COLLAR	D01	FULL ROTOR ASS'Y
51	WRENCH BOLT S/W	120	PACKING COMPONENT CASE	15J	COTTER PIN	D02	CHAIN GUIDE ASS'Y
52	ROLLER COVER	121	ELECTRIC COMPONENT CASE	15K	SAFETY LATCH SPRING	S01	SAFETY LATCH SET
53	ROLLER PIN	122	SPRING WASHER	15L	WRENCH BOLT	S01	SAFETY LATCH SET
54	ROLLER	123	NAME PLATE	15N	HEX BOLT	S02	TOP HOOK PIN SET
55	STRIPPER	124	HEX NUT	15O	U NUT	S03	EYE BOLT SET
56	TAP SCREW	125	EYE BOLT	15Q	THRUST BEARING	S04	CORD HOLDER SET
57	M/S BRACKET	126	MACHIN SCREW S/W	15R	ROLLER BEARING	S05	CHAIN STOPPER SET
58	HEX BOLT S/W	127	LOAD LIMITER ASS'Y	15S	U-NUT	S06	CHAIN CONTAINER SUPPORT PIN SET
59	LIMIT SWITCH	128	CHAIN CONTAINER PIN	15X	HOOK NAME PLATE	S07	CHAIN CONTAINAER HANGER PIN SET
60	CHAIN GUIDE	129	STAY PIPE	247	SHACKLE	S11	CONNECTING BOLT SET
61	PACKING CHAIN GUIDE	130	RETURN SPRING	750	PLAIN WASHER	S12	CHAIN ANCHORAGE BOLT SET
62	WRENCH BOLT S/W	131	PLAIN WASHER	852	R PIN	S13	BOTTOM HOOK LOAD BLOCK SET
63	STAY BOLT A	132	CHAIN CONTAINER	842	CHAIN CONTAINER SUPPORT	S14	ARM SET
64	ORING	133	CHAIN CONTAINER HANGER	850	PLAIN WASHER	S15	CLUTCH SET
65	WRENCH BOLT S/W	134	CHAIN CONTAINER HANGER PIN	851	HEX NUT	S16	CHAIN OIL BOTTLE SET

8.10 Exploded View of Food Grade Hoist (DSSFS, EDSSFSF- Type)

NO	ASSEMBLED PARTS	NO	ASSEMBLED PARTS	NO	ASSEMBLED PARTS
A01	A1N, 13, 30.	A12(DSS)	116, 150, 151, 152, A19, 156, 157, 158, 159.	D02	A18, 042, 043, 044, 047, 048, 051, 052, 053, 054, 055, 056,
A1N	11, 12.		220, 221, 222, 750.		057, 058, 059, 060, 061, 065
A02	17, 21.	A13	162, 163.	S01	15E, 15K, 15L, 15S.
A03	A02, 18, 20.	A09(2W)	S01, 1A	S02	34, 70, 71.
A4S	22.	A15(2W)	S01, S13, 15D, 15F, 15G, 15H, 15I, 15J, 15N, 15O, 15Q.	S03	122, 124, 125, 247.
A04	A4S, 23, 26, 27.		15R, 15X.	S04	113, 114.
A05	35, 36.	A17	1, 4, 7, 9, 38.	S05	145, 146
A06	40, 41.	A18	45, 46.	S06	842, 850, 851, 852
A07	128, 129, 130, 131, 132, 133, 148.	A19	153, 154, 155.	S07	134, 135.
A08	S01, 15A, 15B, 15M, 15O, 15P, 15Q, 15T.	A20	159.	S11	175, 176, 177
A09	S01, 1A	A23	162.	S12	179, 180
A10	35, 68, 208, 213.		OPTION PARTS	S13	181, 190
A11	90, 91.	W1H	W1H	S14	178, S11, S12.
		D01	A01, A03, A17, 5, 6, 8, 10, 14.	S15	87, 88, 89, 92, 93, 94, 95, 96, 97, A11, 209, 216, 217,218,219.

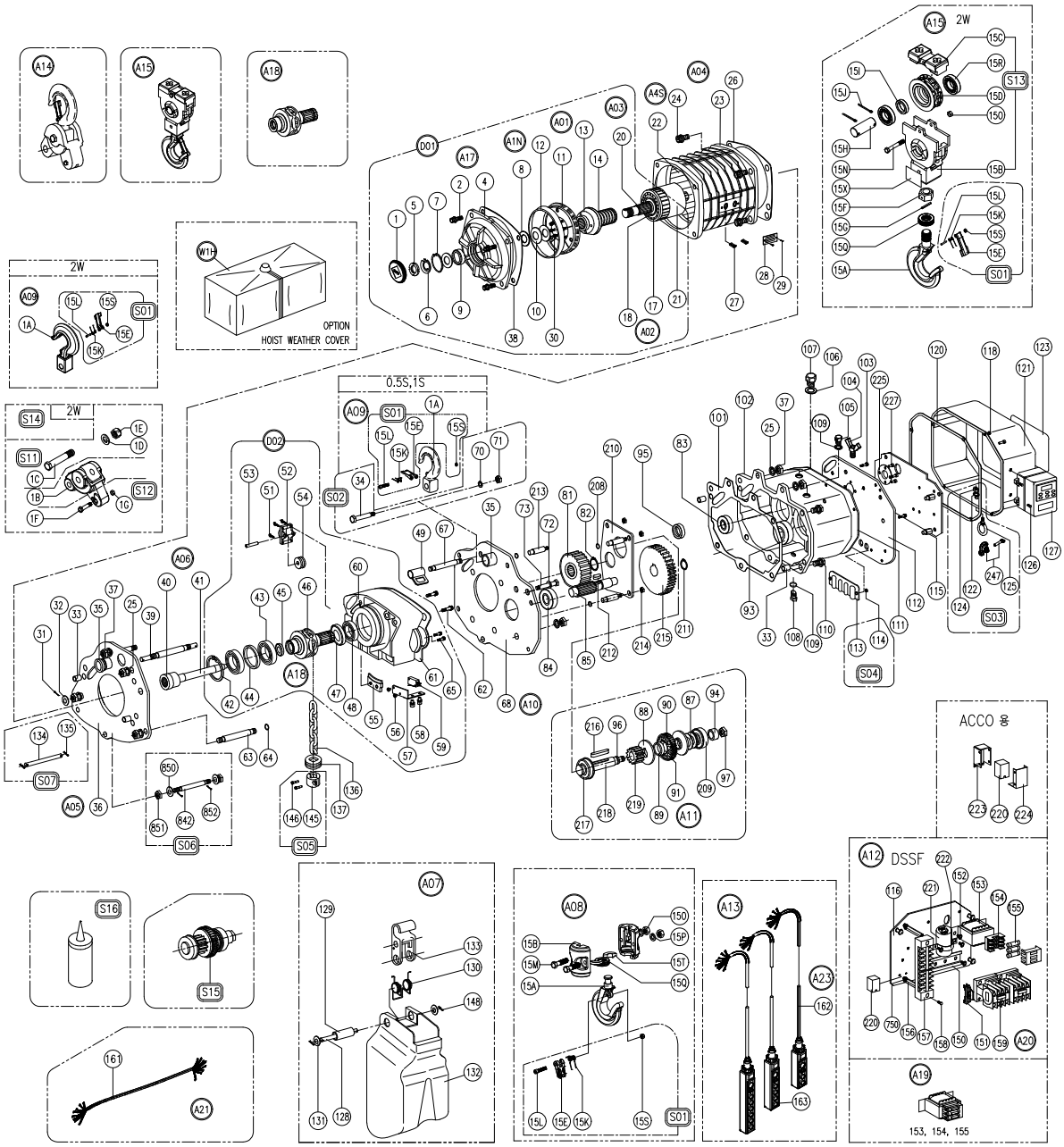

8.11 Part List (DSSFS-1S, 2W)

NO	DESCRIPTION	NO	DESCRIPTION	NO	DESCRIPTION	NO	DESCRIPTION
1	PACKING CAP	64	ORING	133	CHAIN CONTAINER HANGER	210	CENTER PLATE
2	WRENCH BOLT S/W	65	WRENCH BOLT S/W	134	CHAIN CONTAINER HANGER PIN	211	SNAP RING
4	BRAKE COVER	67	STAY BOLT B	135	R PIN	212	KEY
5	LOCK NUT	68	GEAR SIDE PLATE	136	LOAD CHAIN	213	STAY BOLT
6	LOCK WASHER	70	SPRING WASHER	137	BUMPER	214	U NUT
7	SNAP RING	71	U-NUT	15A	BOTTOM HOOK	215	4TH GEAR
8	PLAIN WASHER	72	PACKING STOPPER BOLT	15B	BOTTOM HOOK COVER	216	KEY
9	BALL BEARING	73	STOPPER BOLT	15M	HEX BOLT	217	BALL BEARING
10	CLUTCH SPRING	15L	WRENCH BOLT	15O	HEX NUT	218	CLUTCH SHAFT
11	BRAKE DISC	15E	SAFETY LATCH	15P	SPRING WASHER	219	3RD GEAR
12	BRAKE DISC LINING	15K	SAFETY LATCH SPRING	15Q	THRUST BEARING	220	START SWITCH
13	MOVING CORE	1A	TOP HOOK	15T	SPLIT RING	223	START SWITCH HOUSING
14	BRAKE SPRING	15S	U-NUT	145	CHAIN STOPPER	224	START SWITCH COVER
17	MAGNETIC CORE	81	4TH GEAR	146	WRENCH BOLT	247	SHACKLE
18	PLAIN WASHER	82	SNAP RING	148	R PIN	750	PLAIN WASHER
20	ROTOR SHAFT	83	BALL BEARING	150	CHANNEL	852	R PIN
21	ROTOR CORE	84	BALL BEARING	151	CHANNEL STOPPER	842	CHAIN CONTAINER SUPPORT PIN
22	STATOR CORE	85	5TH GEAR	152	MACHINE SCREW S/W P/W(L)	850	PLAIN WASHER
23	MOTOR CASE	87	CLUTCH SPRING	153	TRANSFORMER	851	HEX NUT
24	WRENCH BOLT S/W	88	CLUTCH DISC	154	FUSE HOLDER	ASSEMBLY(DSS)	
25	SPRING WASHER	89	GUIDE COLLAR	155	FUSE	A01	BRAKE ASS'Y
26	PACKING MOTOR CASE	90	2ND GEAR LINING	156	HEX STAY PIN	A1N	BRAKE DISC ASS'Y
27	SPRING PIN	91	2ND GEAR	157	TERMINAL BLOCK	A02	PULL ROTOR ASS'Y
28	MOTOR NAME PLATE	93	BALL BEARING	158	MACHINE SCREW S/W	A03	ROTOR ASS'Y
29	RIVET	94	COLLAR A	159	MAGNETIC CONTACTOR	A04	MOTOR ASS'Y
30	WRENCH BOLT S/W	95	OIL SEAL	161	POWER CABLE	A4S	STATOR ASS'Y
31	R PIN	96	ORING	162	PENDANT CABLE	A05	MOTOR SIDE PLATE ASS'Y
32	PLAIN WASHER	97	U-NUT	163	PENDANT ASS'Y	A06	1ST GEAR ASS'Y
33	SPRING PIN	101	PACKING GEAR CASE	208	O RING	A07	CHAIN CONTAINER ASS'Y
34	TOP HOOK PIN	102	GEAR CASE	220	START SWITCH	A08	BOTTOM HOOK ASS'Y
35	SUPPORT BOSS	103	WRENCH BOLT S/W	221	CAPACITOR	A09	TOP HOOK ASS'Y
36	MOTOR SIDE PLATE	104	OIL PLUG(!"#$)	222	SADDLE	A10	GEAR SIDE PLATE ASS'Y
37	HEX NUT	105	AIR HOLE BOLT	1A	TOP HOOK	A11	2ND GEAR ASS'Y
38	PACKING BRAKE COVER	106	PACKING OIL PLUG	1B	ARM	A12	ELECTRIC EQUIPMENT ASS'Y
39	CHAIN CONTAINER STAY	107	OIL PLUG	1C	CONNECTING BOLT	A13	PENDANT & CABLE ASS'Y
40	1ST GEAR JOINT	108	HEX BOLT	1D	PLAIN WASHER	A14	TOP HOOK ASS'Y - 2W
41	1ST GEAR	109	ORING	1E	U-NUT	A15	BOTTOM HOOK ASS'Y - 2W
42	SNAP RING	110	HEX BOLT S/W	1F	CHAIN ANCHORAGE BOLT	A17	BRAKE COVER ASS'Y
43	BALL BEARING	111	PACKING BOARD	1G	U-NUT	A18	LOAD SHEAVE ASS'Y
44	CHAIN GUIDE COLLAR	112	ELECTRIC COMPONENT BOARD	15A	BOTTOM HOOK	A19	TRANSFORMER ASS'Y
45	OIL SEAL	113	CORD HOLDER	15B	BOTTOM HOOK COVER	A21	POWER CABLE ASS'Y
46	LOAD SHEAVE	114	HEX NUT	15C	BOTTOM HOOK CHAIN GUIDE	A23	PENDANT CABLE ASS'Y
47	OIL SEAL	115	HEX STAY PIN	15D	IDLE SHEAVE	D01	FULL ROTOR ASS'Y
48	BALL BEARING	116	ELECTRIC EQUIPMENT BOARD	15E	SAFETY LATCH	D02	CHAIN GUIDE ASS'Y
49	HANGER HOLDING METAL	118	HEX BOLT S/W	15F	BOTTOM HOOK NUT	S01	SAFETY LATCH SET
51	WRENCH BOLT S/W	120	PACKING COMPONENT CASE	15G	SPRING PIN	S01	SAFETY LATCH SET
52	ROLLER COVER	121	ELECTRIC COMPONENT CASE	15H	IDLE SHEAVE PIN	S02	TOP HOOK PIN SET
53	ROLLER PIN	122	SPRING WASHER	15I	IDLE SHEAVE COLLAR	S03	EYE BOLT SET
54	ROLLER	123	NAME PLATE	15J	COTTER PIN	S04	CORD HOLDER SET
55	STRIPPER	124	HEX NUT	15K	SAFETY LATCH SPRING	S05	CHAIN STOPPER SET
56	TAP SCREW	125	EYE BOLT	15L	WRENCH BOLT	S06	CHAIN CONTAINER SUPPORT PIN SET
57	M/S BRACKET	126	MACHINE SCREW S/W	15N	HEX BOLT	S07	CHAIN CONTAINAER HANGER PIN SET
58	HEX BOLT S/W	127	LOAD LIMITER ASS'Y	15O	U NUT	S11	CONNECTING BOLT SET
59	LIMIT SWITCH	128	CHAIN CONTAINER PIN	15Q	THRUST BEARING	S12	CHAIN ANCHORAGE BOLT SET
60	CHAIN GUIDE	129	STAY PIPE	15R	ROLLER BEARING	S13	BOTTOM HOOK LOAD BLOCK SET
61	PACKING CHAIN GUIDE	130	RETURN SPRING	15S	U-NUT	S14	ARM SET
62	WRENCH BOLT S/W	131	PLAIN WASHER	15X	HOOK NAME PLATE	S15	CLUTCH SET
63	STAY BOLT A	132	CHAIN CONTAINER	209	BALL BEARING	S16	CHAIN OIL BOTTLE SET

8.12 PART LIST

PARTS OF CHAIN HOIST

NO.	MODEL NO (HOOK SUSPENSION)	UNIT	Remark	1T	2T	1T	2T	0.5T	1T	2T	0.5T	1T	2T
				1 SPEED (3PH)		2 SPEED (3PH & 1PH)					1 SPEED (1PH)		
	DESCRIPTION			DST-1S	DST-2W	EDST-1S	EDST-2W	EDSS- 0.5S	EDSS-1S	EDSS-2W	DSS-0.5S	DSS-1S	DSS-2W
D01	FULL ROTOR ASS'Y	SET											
D02	CHAIN GUIDE ASS'Y	SET											
AA1	TOP HOOK AND ARM ASS'Y (2 CHAIN FALL)	SET		N/A		N/A		N/A			N/A		
	CROSS MOUNT TOP HOOK AND ARM ASS'Y (OPTION)	SET		N/A		N/A		N/A			N/A		
A01	BRAKE ASS'Y	SET											
A03	ROTOR ASS'Y	SET											
A04	MOTOR ASS'Y	SET											
A05	MOTOR SIDE PLATE ASS'Y	SET											
A06	1ST GEAR ASS'Y	SET											
A07	CHAIN CONTAINER ASS'Y	SET	PL1										
			PCCA	15M	7.5M	15M	7.5M	15M		7.5M	15M		7.5M
			PCCB	40M	20M	40M	20M	40M		20M	40M		20M
A08	BOTTOM HOOK & BLOCK ASS'Y (1 CHAIN FALL)	SET			N/A		N/A			N/A			N/A
A09	TOP HOOK WITH LATCH	SET											
	CROSS MOUNT TOP HOOK WITH LATCH (OPTION)	SET						N/A			N/A		
A10	GEAR SIDE PLATE ASS'Y	SET											
D11	CLUTCH ASS'Y	SET											
A12	ELECTRIC EQUIPMENT ASS'Y (MAGNETIC)	SET				N/A							
	ELECTRIC EQUIPMENT ASS'Y (PF523 TYPE) (INVERTER)	SET	230V	N/A							N/A		
		SET	460V	N/A				N/A			N/A		
A13	PENDANT & CABLE ASS'Y(SINGLE SPEED)	SET	2P-0.75SQX5C			N/A							
	PENDANT & CABLE ASS'Y(SINGLE SPEED)	SET	4P-0.75SQX7C			N/A							
	PENDANT & CABLE ASS'Y(DUAL SPEED)	SET	2P-0.75SQX7C	N/A							N/A		
	PENDANT & CABLE ASS'Y(DUAL SPEED)	SET	4P-0.75SQX9C	N/A							N/A		
A15	BOTTOM HOOK & BLOCK ASS'Y (2 CHAIN FALL)	SET		N/A		N/A		N/A			N/A		
A16	BRAKING RESISTANCE ASS'Y	SET		N/A							N/A		
A17	BRAKE COVER ASS'Y	SET											
A18	LOAD SHEAVE ASS'Y	SET	46,47										
A19	TRANSFORMER ASS'Y 48V (OPTION) – (48V NOT UL RATED)	SET	35VA (1PH) 35VA (3PH)										
	TRANSFORMER ASS'Y 110V	SET	35VA (1PH) 35VA (3PH)										
A20	MAGNETIC CONTACTOR ASS'Y - 48V (OPTION)	SET	MC-12b/22b			N/A							
	MAGNETIC CONTACTOR ASS'Y - 110V	SET	MC-12b/22b			N/A							
A21	POWER CABLE ASS'Y	SET	2.5SQ X 4C										
A23	PENDANT CABLE ASS'Y	SET	0.75SQ x 5C			N/A							
	PENDANT CABLE ASS'Y	SET	0.75SQ x 7C										
	PENDANT CABLE ASS'Y	SET	0.75SQ x 9C	N/A							N/A		
A1N	BRAKE DISC ASS'Y	SET											
S01	SAFETY LATCH SET	SET	75,76,77,79										
S02	TOP HOOK PIN SET	SET	34,70,71										
S03	EYE BOLT SET	SET	122,124,125,247										
S04	CORD HOLDER SET	SET	113,114										
S05	CHAIN STOPPER SET	SET	145,146										
S06	CHAIN CONTAINER SUPPORT PIN SET – PCCB(OPTION)	SET	31,32,134										
S07	CHAIN CONTAINER HANGER PIN SET (STANDARD)	SET	201,202,203,204										
S11	CONNECTING BOLT SET	SET	M16	N/A		N/A		N/A			N/A		
S12	ANCHORAGE BOLT SET	SET	M8	N/A		N/A		N/A			N/A		
S13	BOTTOM HOOK LOAD BLOCK SET	SET		N/A		N/A		N/A			N/A		
S14	ARM ASS'Y	SET	S11,S12,S14	N/A		N/A		N/A			N/A		
W1H	WEATHER COVER FOR HOIST	EA											

NO.	MODEL NO (HOOK SUSPENSION)	UNIT	Remark	1T	2T	1T	2T	0.5T	1T	2T	0.5T	1T	2T
				1 SPEED (3PH)		2 SPEED (3PH & 1PH)					1 SPEED (1PH)		
	DESCRIPTION			DST-1S	DST-2W	EDST-1S	EDST-2W	EDSS- 0.5S	EDSS-1S	EDSS-2W	DSS-0.5S	DSS-1S	DSS-2W
15A	BOTTOM HOOK WITH LATCH	EA											
15B	BOTTOM HOOK COVER x 2	SET			N/A		N/A			N/A			N/A
15D	IDLE SHEAVE	EA	Ø7.1	N/A		N/A		N/A			N/A		
15F	BOTTOM HOOK NUT	EA	M20	N/A		N/A		N/A			N/A		
15G	SPRING PIN	EA	Ø4x35	N/A		N/A		N/A			N/A		
15H	IDLE SHEAVE PIN	EA		N/A		N/A		N/A			N/A		
15I	IDLE SHEAVE COLLAR	EA		N/A		N/A		N/A			N/A		
15J	COTTER PIN	EA	4x40	N/A		N/A		N/A			N/A		
15N	HEX BOLT	EA	M8x70	N/A		N/A		N/A			N/A		
15Q	THRUST BEARING	EA	51103 51104/51205										
15R	ROLLER BEARING	EA	NF204	N/A		N/A		N/A			N/A		
15T	SPLIT RING	EA			N/A		N/A			N/A			N/A
15M	HEX BOLT	EA	M8x35 M6x25		N/A		N/A			N/A			N/A
15P	SPRING WASHER	EA	M8		N/A		N/A			N/A			N/A
15O	HEX NUT	EA	M6/M8		N/A		N/A			N/A			N/A
15O	U-NUT	EA	M8	N/A		N/A		N/A			N/A		
15X	HOOK NAME PLATE	EA	59x38	N/A		N/A		N/A			N/A		
1	PACKING CAP	EA											
2	WRENCH BOLT S/W	EA	M8x25										
4	BRAKE COVER (#38 INCLUDED)	EA											
5	LOCK NUT	EA	AN04										
6	LOCK WASHER	EA	AW04										
7	SNAP RING	EA	R47										
8	PLAIN WASHER	EA	21x33x4T										
9	BALL BEARING	EA	6204DD										
10	CLUTCH SPRING	EA											
13	MOVING CORE	EA											
14	BRAKE SPRING	EA											
24	WRENCH BOLT S/W	EA	M10x20										
25	SPRING WASHER	EA	M10										
26	PACKING MOTOR CASE	EA											
28	MOTOR NAME PLATE	EA	230/460V										
29	RIVET x 2	SET											
30	WRENCH BOLT S/W	EA	M6x15										
33	SPRING PIN	EA	Ø10x12										
37	HEX NUT	EA	M10										
38	PACKING BRAKE COVER	EA											
39	CHAIN CONTAINER STAY BOLT	EA											
42	SNAP RING	EA	R80										
43	BALL BEARING	EA	6208ZZ										
44	CHAIN GUIDE COLLAR	EA											
45	OIL SEAL	EA	21x32x8										
47	OIL SEAL	EA	45x68x12										
48	BALL BEARING	EA	6008ZZ										
49	HANGER HOLDING METAL	EA											
51	WRENCH BOLT S/W	EA	M6x18										
52	ROLLER COVER	EA											
53	ROLLER PIN	EA											
54	ROLLER	EA											
55	STRIPPER	EA											
56	MACHIN SCREW	EA	M4x10										
57	M/S BRACKET	EA											
58	HEX BOLT S/W	EA	M6x10										
59	LIMIT SWITCH	EA											
60	CHAIN GUIDE	EA											
61	PACKING CHAIN GUIDE	EA											
62	WRENCH BOLT S/W	EA	M8x45										
63	STAY BOLT A	EA											
64	O-RING	EA	P-10										
65	WRENCH BOLT S/W	EA	M5x25										

NO.	MODEL NO (HOOK SUSPENSION)	UNIT	Remark	1T	2T	1T	2T	0.5T	1T	2T	0.5T	1T	2T
				1 SPEED (3PH)		2 SPEED (3PH & 1PH)					1 SPEED (1PH)		
	DESCRIPTION			DST-1S	DST-2W	EDST-1S	EDST-2W	EDSS- 0.5S	EDSS-1S	EDSS-2W	DSS-0.5S	DSS-1S	DSS-2W
67	STAY BOLT B	EA											
72	PACKING STOPPER BOLT	EA											
73	STOPPER BOLT	EA											
81	4TH GEAR (DSS 6TH GEAR)	EA											
82	SNAP RING	EA	S-40										
83	BALL BEARING	EA	6301ZZ										
84	BALL BEARING	EA	6204ZZ										
85	3RD GEAR(DSS 5TH GEAR)	EA		N/A									
93	BALL BEARING	EA	6203ZZ	N/A									
95	OIL SEAL	EA	25x40x8										
101	PACKING GEAR CASE	EA											
102	GEAR CASE(#101 INCLUDED)	EA											
103	WRENCH BOLT S/W	EA	M6x18										
105	AIR HOLE BOLT	EA	M10x15										
106	PACKING OIL PLUG	EA											
107	OIL PLUG	EA	M16x15										
108	HEX BOLT	EA	M10x10										
109	O-RING	EA	P8A										
110	HEX BOLT S/W	EA	M10x20										
111	PACKING BOARD	EA											
112	COMPONENT BOARD	EA											
115	HEX STAY PIN	EA	12mm										
116	ELECTRIC EQUIPMENT BOARD	EA											
118	HEX BOLT S/W	EA	M6x10										
120	PACKING CONTROL COVER	EA											
121	CONTROL COVER (#120 INCLUDED)	EA											
123	NAME PLATE	EA											
127	LOAD LIMITER ASS'Y (OPTION)	SET	JDL-70 JDL-70 (9.99)										
128	CHAIN CONTAINER HANGER PIN	EA											
129	STAY PIPE	EA											
130	RETURN SPRING	EA											
131	PLAIN WASHER	EA	M12x2.3T										
132	CHAIN CONTAINER	EA											
133	CHAIN CONTAINER HANGER	EA											
136	LOAD CHAIN	M	Ø6.3 , Ø7.1										
137	BUMPER	EA											
148	R PIN	EA	R12										
150	CHANNEL	EA	115mm			N/A							
152	MACHINE SCREW S/W P/W (L)	EA	M4 X 8										
153	TRANSFORMER - 48V (OPTION) - NOT UL LISTED	EA	35VA (1PH) 35VA (3PH)										
	TRANSFORMER - 110V	EA	35VA (1PH) 35VA (3PH)										
154	FUSE HOLDER	SET	3P										
155	FUSE	EA	250V 1A										
156	HEX STAY PIN	EA	2204 (65mm) 2156 (110mm)										
157	TERMINAL BLOCK	EA	1157(10P) 1197(12P)										
158	MACHINE SCREW S/W	EA	M4x12										
159	MAGNETIC CONTACTOR - 48V (OPTION)	EA	MC-12b/22b			N/A							
	MAGNETIC CONTACTOR - 110V	EA	MC-12b/22b			N/A							
160	CHANNEL STOPPER	EA				N/A							
161	POWER CABLE	M	2.5SQ X 4C										
162	PENDANT CABLE (5C)	M	0.75SQ x 5C			N/A							
	PENDANT CABLE (7C)	M	0.75SQ x 7C										
	PENDANT CABLE (9C)	M	0.75SQ x 9C	N/A							N/A		
163	PENDANT ASS'Y (2P)	EA											
	PENDANT ASS'Y (4P)	EA											
	PENDANT ASS'Y (6P)	EA											
210	CENTER PLATE	EA		N/A									
211	SNAP RING	EA	S-25	N/A									

NO.	MODEL NO (HOOK SUSPENSION)	UNIT	Remark	1T	2T	1T	2T	0.5T	1T	2T	0.5T	1T	2T
				1 SPEED (3PH)		2 SPEED (3PH & 1PH)					1 SPEED (1PH)		
	DESCRIPTION			DST-1S	DST-2W	EDST-1S	EDST-2W	EDSS- 0.5S	EDSS-1S	EDSS-2W	DSS-0.5S	DSS-1S	DSS-2W
212	Key (5TH GEAR)	EA	7x7x15	N/A									
214	U-NUT	EA	M6	N/A									
215	4TH GEAR (1Ph)	EA		N/A									
220	START SWITCH	EA	120V 24A	N/A									
221	CAPACITOR	EA	125VAC 552㎌	N/A									
222	SADDLE ASS'Y	SET		N/A									
250	INTERFACE	EA	48V (OPTION)	N/A							N/A		
		EA	110V	N/A							N/A		
251	INTERFACE BOARD	EA		N/A							N/A		
252	INVERTER (PF523 TYPE) (2.2kw / 3HP) - 220V	EA		N/A							N/A		
	INVERTER (PF523 TYPE) (2.2kw / 3HP) - 380V	EA		N/A				N/A					
253	BRAKING RESISTANCE	EA	200W 40Ω	N/A							N/A		
254	BRAKING RESISTANCE COVER	EA		N/A							N/A		
255	CABLE HOLDER	EA	JOPG-13.5	N/A							N/A		
256	BASE PLATE	EA		N/A							N/A		
257	BRACKET	EA		N/A							N/A		
258	PCB SUPPORT BAR	EA		N/A							N/A		

PARTS OF MOTOR TROLLEY

NO.	DESCRIPTION	UNIT	SIZE	DSTM-1S EDSTM-1S	DSTM-2W EDSTM-2W	DSSM-0.5S EDSSM-0.5S	DSSM-1S EDSSM-1S	DSSM-2W EDSSM-2W
A01	BRAKE ASS'Y	SET						
S02	BRAKE DISC ASS'Y	SET						
A03	ROTOR ASS'Y	SET	1PHSKEW 1.5	N/A				
		SET	3PHSKEW 1.5			N/A		
A4S	STATOR ASS'Y	SET	1PH 0.4KW 110/220V	N/A		N/A		
		SET	3PH 0.4KW 220/380V	N/A		N/A		
A04	MOTOR ASS'Y	SET	1PH 0.4KW 110/220V	N/A				
		SET	3PH 0.4KW 220/380V			N/A		
A05	GEAR SIDE PLATE ASS'Y	SET						
A06	PLAIN SIDE PLATE ASS'Y	SET						
A08	ELECTRIC EQUIPMENT ASS'Y-CONTACTOR	SET	1PH 110/220V	N/A				
	ELECTRIC EQUIPMENT ASS'Y-CONTACTOR	SET	3PH 220/380V			N/A		
	ELECTRIC EQUIPMENT ASS'Y-VFD	SET	220V					
	ELECTRIC EQUIPMENT ASS'Y-VFD	SET	380V			N/A		
A09	GEARED WHEEL ASS'Y	SET						
A10	PLAIN WHEEL ASS'Y	SET						
A11	POWER CABLE ASS'Y (1.5M)	SET	2.5SQx4C					
A12	COMBINED CABLE ASS'Y	SET	2.5SQx4C + 1.5SQx8C					
A13	MOTOR CABLE ASS'Y	SET	0.75SQx12C					
W1T	WEATHER COVER	SET						
004	SNAP RING	EA	S17 / S25					
005	PLAIN WASHER	EA	32*18 / 40*26.5					
006	SNAP RING	EA	R-52					
008	GEARED WHEEL	EA						
009	BALL BEARING	EA	6203ZZ / 6205ZZ					
010	SNAP RING	EA	R-40 / R-52					
011	WRENCH BOLT S/W	EA	M10x20					
012	HEX BOLT S/W P/W	EA	M8x20					
013	GUIDE ROLLER BODY	EA						
014	GUIDE ROLLER	EA						
015	GUIDE ROLLER PIN	EA						
018	CORD HOLDER SET	EA						
019	BALL BEARING	EA	6003ZZ					
028	PLAIN WHEEL	EA						
034	U NUT	EA	M10					
035	SHAFT	EA						
036A	ADJUSTING COLLAR	EA						
037	WRENCH BOLT	EA	M10x60 / M10x70					
038	COTTER PIN	EA	Ø3x25					
039	STOPPER PIN	EA						
041	MOTOR CASE	EA						
043	BRAKE COVER	EA						
044	BRAKE SPRING	EA						
045	MOTOR NAME PLATE	EA	1PH CONTACTOR	N/A				
			3PH VFD, CONTACTOR 1PH VFD					
046	WRENCH BOLT S/W	EA	M8x20					
055	TERMINAL BLOCK COVER	EA						
056	PACKING COVER	EA						
057	TERMINAL BLOCK	EA	6P 250VAC 20A					
076	2ND GEAR	EA						
077	SPRING PIN	EA	Ø10x12					
078	3RD GEAR	EA						
079	BALL BEARING	EA	6205ZN					
080	SNAP RING	EA	S-25					

NO.	DESCRIPTION	UNIT	SIZE	DSTM-1S EDSTM-1S	DSTM-2W EDSTM-2W	DSSM-0.5S EDSSM-0.5S	DSSM-1S EDSSM-1S	DSSM-2W EDSSM-2W
081	COLLAR FOR 3RD GEAR	EA						
082	PACKING FLANGE	EA						
124	INVERTER (2HP)	EA	NC0 110/200V					
		EA	NC0 380V			N/A		
125	MACHINE SCREW S/W	EA	M4x16					
126	MACHINE SCREW S/W P/W(S)	EA	M4x8					
137	MAGNETIC CONTACTOR	EA	1PH GMC-16M	N/A				
		EA	3PH GMC-12M			N/A		
141	STARTING SWITCH	EA		N/A				
144	CAPACITOR	EA		N/A				
145	CONDENSER HOLDER	EA		N/A				
146	MACHINE SCREW S/W P/W(L)	EA	M4x12					
150	CHANNEL	EA	115mm					
171	SUSPENSION PLATE (OPTION)	EA						
	CONNECTOR - PARALLEL	EA						
	CONNECTOR - CROSS MOUNT (OPTION)	EA						
524	WRENCH BOLT S/W	EA	M5x12					
534	MOVING CORE	EA						
539	BALL BEARING	EA	6203DD					
541	BALL BEARING	EA	6203DD					
591	POWER CABLE	M	2.5SQx4C					
592	COMBINED CABLE	M	2.5SQx4C + 1.5SQx8C					
604	TERMINAL BLOCK	EA	12P 250VAC 20A					
620	INTERFACE	EA	110V					
621	INTERFACE BOARD	EA						
623	PCB SUPPORT BAR	EA	H5xØ4					
644	CABLE GLAND	EA	PG13.5					
645	MOTOR CABLE	SET	0.75SQx12C					
646	CABLE GLAND	EA	PG21					
658	MACHINE SCREW S/W	EA	M4x12					
660	LIMIT SWITCH BOARD (OPTION)	EA						
661	WRENCH BOLT S/W (OPTION)	EA	M6x20					
662	LIMIT SWITCH (OPTION)	EA	HY-M904					
666	HEX BOLT S/W	EA	M6x10					
667	CHANNEL STOPPER	EA						
731	CONTROL BOX	EA						
732	WRENCH BOLT S/W	EA	M8x35					
733	SUPPORT BAR	EA						
734	ELECTRIC EQUIPMENT BOARD	EA						
735	HEX STAY PIN	EA	12mm					
742	CONTROL BOX COVER	EA						
743	CONTROL BOX PACKING	EA						
744	MACHINE SCREW S/W	EA						
745	NAME PLATE	EA						
749	HEX STAY PIN	EA	MAGNET 64mm					
		EA	INVERTER 120mm					
750	PLAIN WASHER	EA	M6					
754	SET SCREW	EA	M10x10					
755	RIVET	EA	Ø2.4x8					
760	BUMPER STOPPER	EA						
761	BUMPER BRACKET	EA						
762	HEX NUT	EA	M10					
763	SPRING WASHER	EA	M10					
764	HEX BOLT S/W	EA	M10x20					
11A	HEX WRENCH BOLT S/W	EA	M10x40					

NO.	DESCRIPTION	UNIT	SIZE	DSSM-0.5S (8P)	DSSM-1S (8P)	DSSM-2W (8P)
A02	BRAKE ASS'Y	SET				
A03	ROTOR ASS'Y	SET				
A04	MOTOR ASS'Y	SET	1PH 0.4KW 110/220V			
A05	GEAR SIDE PLATE ASS'Y	SET				
A06	PLAIN SIDE PLATE ASS'Y	SET				
A08	ELECTRIC EQUIPMENT ASS'Y-CONTACTOR	SET	1PH 110/220V			
	ELECTRIC EQUIPMENT ASS'Y-VFD	SET	220V			
A09	GEARED WHEEL ASS'Y	SET				
A10	PLAIN WHEEL ASS'Y	SET				

NO.	DESCRIPTION	UNIT	SIZE	DSSM-0.5S (8P)	DSSM-1S (8P)	DSSM-2W (8P)
A11	POWER CABLE ASS'Y (1.5M)	SET	2.5SQx4C			
A12	COMBINED CABLE ASS'Y	SET	2.5SQx4C + 1.5SQx8C			
A13	MOTOR CABLE ASS'Y	SET	0.75SQx12C			
W1T	WEATHER COVER	SET				
004	SNAP RING	EA	S17 / S25			
005	PLAIN WASHER	EA	32*18 / 40*26.5			
006	SNAP RING	EA	R-52			
008	GEARED WHEEL	EA				
009	BALL BEARING	EA	6203ZZ / 6205ZZ			
010	SNAP RING	EA	R-40 / R-52			
011	WRENCH BOLT S/W	EA	M10x20			
012	WRENCH BOLT S/W	EA	M10x30			
013	GUIDE ROLLER BODY	EA				
014	GUIDE ROLLER	EA				
015	GUIDE ROLLER PIN	EA				
018	CORD HOLDER SET	EA				
020	HEX NUT	EA	M5			
028	PLAIN WHEEL	EA				
034	U NUT	EA	M10			
035	SHAFT	EA				
036A	ADJUSTING COLLAR	EA				
037	WRENCH BOLT	EA	M10x60 / M10x70			
038	COTTER PIN	EA	Ø3x20			
039	STOPPER PIN	EA				
041	MOTOR CASE	EA				
045	MOTOR NAME PLATE	EA	1PH CONTACTOR			
046	WRENCH BOLT S/W	EA	M6x20			
047	SPRING PIN		Ø6x15			
050	WRENCH BOLT S/W	EA	M8x25			
055	TERMINAL BLOCK COVER	EA				
056	PACKING COVER	EA				
057	TERMINAL BLOCK	EA	6P 250VAC 20A			
071	GEAR CASE	EA				
072	FLANGE	EA				
073	WRENCH BOLT S/W	EA	M8x50			
076	2ND GEAR	EA				
077	SPRING PIN	EA	Ø8x18			
078	3RD GEAR	EA				
079	BALL BEARING	EA	6205ZZ			
080	SNAP RING	EA	S-25			
081	COLLAR FOR 3RD GEAR	EA				
082	PACKING FLANGE	EA				
083	WRENCH BOLT S/W	EA	M8x25			
116	ELECTRIC EQUIPMENT BOARD	EA				
171	SUSPENSION PLATE (OPTION)	EA				
	CONNECTOR - PARALLEL	EA				
	CONNECTOR - CROSS MOUNT (OPTION)	EA				
220	STARTING SWITCH	EA				
221	CAPACITOR	EA				
222	SADDLE	EA				
225	HEX STAY PIN	EA				
539	BALL BEARING	EA	6202DD			
541	BALL BEARING	EA	6204DD			
591	POWER CABLE	M	2.5SQx4C			
592	COMBINED CABLE	M	2.5SQx4C + 1.5SQx8C			
593	MOTOR CABLE	M	0.75SQx12C			
604	TERMINAL BLOCK	EA	15P 250VAC 20A			
640	RECTIFIER	EA	SR304			

NO.	DESCRIPTION	UNIT	SIZE	DSSM-0.5S (8P)	DSSM-1S (8P)	DSSM-2W (8P)
642	MACHINE SCREW S/W P/W(S)	EA	M4x8			
644	CABLE GLAND	EA	PG13.5			
645	MOTOR CABLE	SET	0.75SQx12C			
657	MAGNETIC CONTACTOR	EA	3PH MC-12B			
658	MACHINE SCREW S/W	EA	M4x12			
660	LIMIT SWITCH BOARD (OPTION)	EA				
661	WRENCH BOLT S/W (OPTION)	EA	M6x20			
662	LIMIT SWITCH (OPTION)	EA	HY-M904			
664	MACHINE SCREW S/W P/W(L)	EA	M4x8			
665	CHANNEL	EA	115mm			
667	CHANNEL STOPPER	EA				
731	CONTROL BOX	EA				
732	WRENCH BOLT S/W	EA	M8x60			
733	SUPPORT BAR	EA				
742	CONTROL BOX COVER	EA				
743	CONTROL BOX PACKING	EA				
744	MACHINE SCREW S/W	EA	M5x12			
745	NAME PLATE	EA				
749	HEX STAY PIN	EA	DLM3 64mm			
754	SET SCREW	EA	M10x10			
750	PLAIN WASHER	EA	M6			
755	RIVET	EA	Ø2.4x8			
760	BUMPER STOPPER	EA				
761	BUMPER BRACKET	EA				
762	HEX NUT	EA	M10			
763	SPRING WASHER	EA	M10			
764	HEX BOLT S/W	EA	M10x20			
11A	HEX WRENCH BOLT S/W	EA	M10x40			

PARTS OF LOW HEADROOM CLH HOIST

NO.	DESCRIPTION	UNIT	Remark	(E)DSTHM-1S	(E)DSTHM-2W
L01	SIDE PLATE	EA			
L02	IDLE SHEAVE	EA			
L03	GUIDE COLLAR A	EA			
L04	GUIDE ROLLER	EA			
L05	GUIDE COLLAR B	EA			
L07	LIMIT SIDE PLATE	EA			
L08	STAY BOLT	EA			
L09	EYE BOLT SET	EA	M8x15		
L10	CHAIN GUIDE (A)	EA			
L11	LIMIT SWITCH ASS'Y	SET	HY-LM909		
L12	MACHINE SCREW S/W		M5*40		
L13	CONNECTING BOLT	EA		N/A	
L14	WEIGHT	EA			
L15	METAL COLLAR	EA		N/A	
L16	SPRING WASHER	EA	M16	N/A	
L17	CHAIN ANCHORAGE METAL	EA		N/A	
L18	CHAIN ANCHORAGE BOLT SET	EA	M8*42	N/A	
L19	SPRING WASHER	EA	M10		
L20	CHAIN GUIDE	EA			
L21	HEX NUT	EA	M16		
L22	BALL BEARING	EA	6008ZN		
L23	HEX NUT	EA	M10		
L24	CONNECTOR	EA			

PARTS OF LUG MOUNT PLAIN TROLLEY KIT

NO.	DESCRIPTION	UNIT	Remark	PTK-0.5	PTK-1	PTK-2
A10	PLAIN WHEEL ASS'Y	SET				
T05	PLAIN SIDE PLATE ASS'Y A	SET				
T06	PLAIN SIDE PLATE ASS'Y B	SET				
004	SNAP RING	EA	S17, S25			
005	PLAIN WASHER	EA	32*18 / 40*26.5			
009	BALL BEARING	EA	6203ZZ / 6205ZZ			
010	SNAP RING	EA	R40 / R52			
011	WRENCH BOLT S/W	EA	M10*20			
013	GUIDE ROLLER BODY	EA				
014	GUIDE ROLLER	EA				
015	GUIDE ROLLER PIN	EA				
28	PLAIN ROLLER	EA				
034	U-NUT	EA	M10			
035	SHAFT	EA				
036A	ADJUSTING COLLAR	EA				
037	WRENCH BOLT	EA	M10*70 / M10*80			
038	COTTER PIN	EA	ø3x25			
039	STOPPER PIN	EA	CO			
171	SUSPENSION PLATE	EA				
	CONNECTOR - PARALLEL	EA				
	CONNECTOR - CROSS MOUNT	EA				
754	SET SCREW	EA				

9. INVERTER (PowerFlex 523 Adjustable Frequency AC Drive)

9.1 Operating Hoist & Trolley (Dual Speed)

- Low speed at the first step, high speed at the second step.
- Acceleration time of 3.0 seconds and deceleration time of 0.2 seconds for hoist
- Acceleration time of 1.0 seconds and deceleration time of 1.0 seconds for trolley

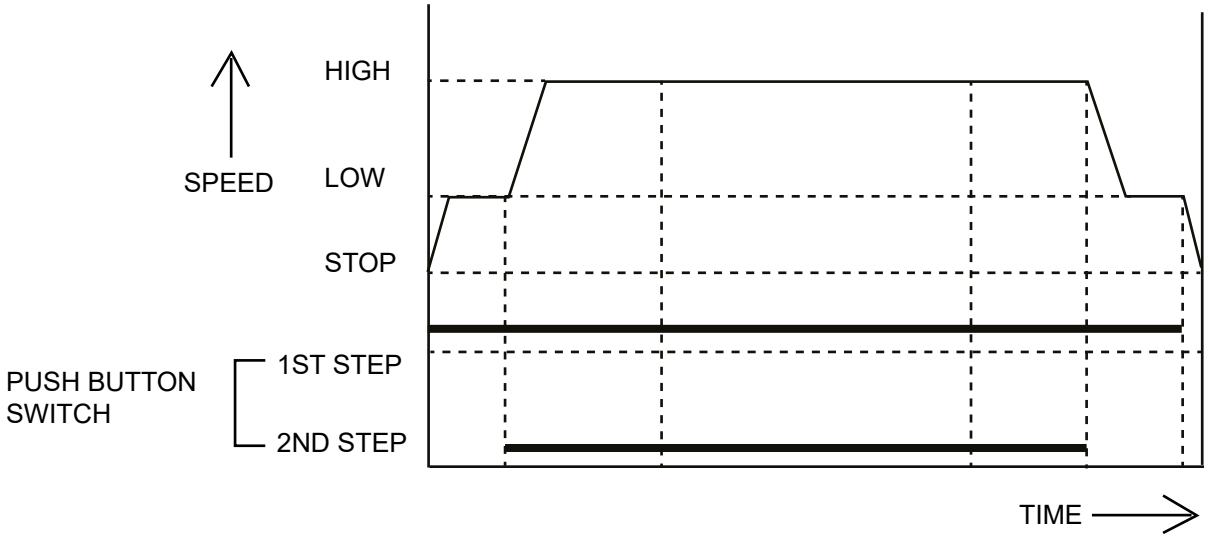

9.2 Push Button Control for Inverter Hoist

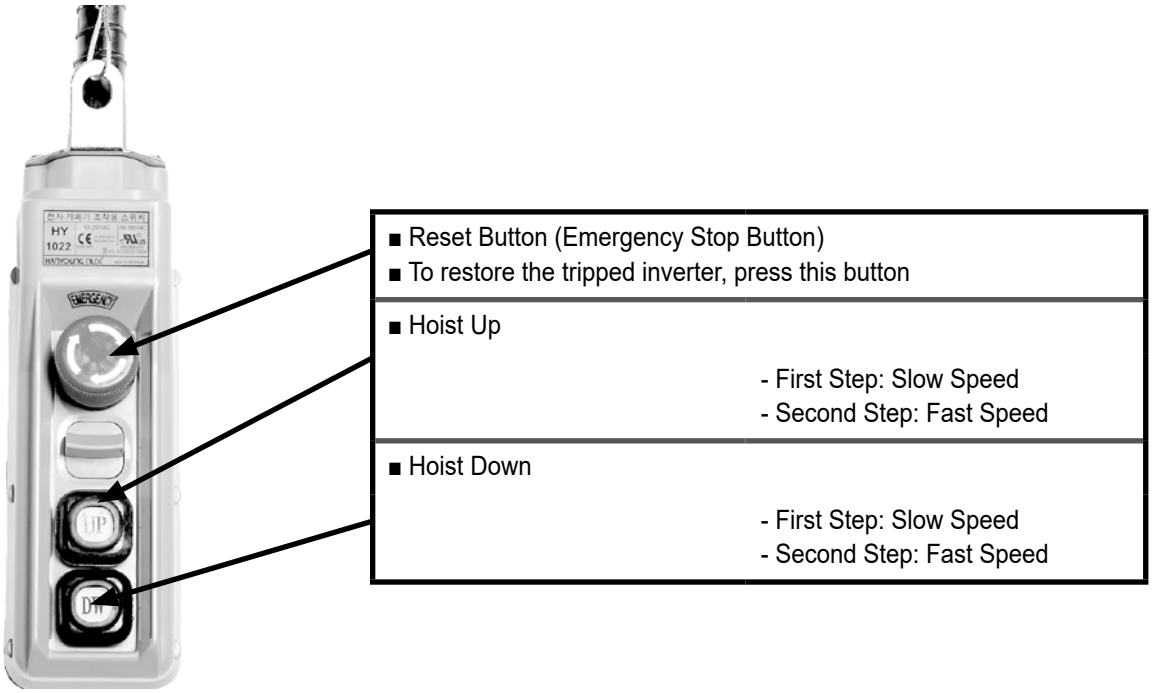

9.3 Trial Operation

⚠DANGER

DISCONNECT POWER AND LOCKOUT DISCONNECTING MEANS BEFORE

PERFORMING SERVICE TO ELECTRICAL PARTS OF THIS EQUIPMENT.

The inverter drive contains high voltage capacitors that take time to discharge after removal of power supply. Wait for 3 minutes for capacitors to discharge to safe voltage levels before proceeding with any check-up electrical parts of this equipment after shutting down the power.

Failure to read and comply with any of the limitations noted herein will result in serious bodily injury or death and/or property damage.

⚠WARNING

- ✓ Check that all wiring has been completed before performing trial operation.
- ✓ Don’t change wiring of push button switch.
- ✓ To change the acceleration or deceleration time, refer to inverter manual.
- ✓ Failure to comply with any of the limitations noted herein can result in serious bodily injury or death and/or property damage.

9.4 Inverter Parameter Settings

2-STEP SPEED INVERTER SETTINGS

CAPACITY	HOIST HZ SETTING	HOIST ACCEL SETTING	HOIST DECEL SETTING
	SET. A410/A411 – LIFTING (up/down)	SET P041	SET P042
1TON (0.5T)	20 Hz – 60Hz	3.0 SEC	0.2 SEC
2TON	20 Hz – 60Hz	3.0 SEC	0.2 SEC
LOW HEAD 1TON	20 Hz – 60Hz	3.0 SEC	0.2 SEC
LOW HEAD 2TON	20 Hz – 60Hz	3.0 SEC	0.2 SEC

* Please note that the parameter setting is subject to change without prior notice by the manufacturer.

9.5 Display and Control Keys

PowerFlex 523

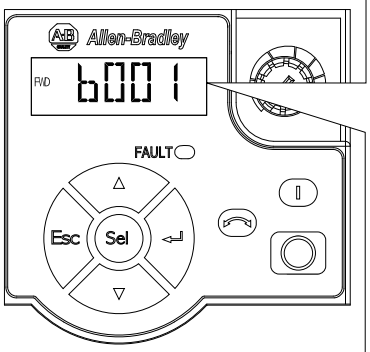

PowerFlex 525

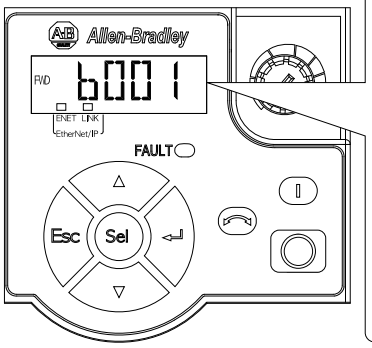

Menu	Parameter Group and Description
b	**Basic Display** Commonly viewed drive operating conditions.
P	**Basic Program** Commonly used programmable functions.
t	**Terminal Blocks** Programmable terminal functions.
C	**Communications** Programmable communication functions.
L	**Logic (PowerFlex 525 only)** Programmable logic functions.
d	**Advanced Display** Advanced drive operating conditions.
A	**Advanced Program** Remaining programmable functions.
N	**Network** Network functions that are shown only when a comm card is used.
M	**Modified** Functions from the other groups with values changed from default.
f	**Fault and Diagnostic** Consists of list of codes for specific fault conditions.
G	**AppView and CustomView** Functions from the other groups organized for specific applications.

Control and Navigation Keys

Display	Display State	Description
ENET (PowerFlex 525 only)	Off	Adapter is not connected to the network.
	Steady	Adapter is connected to the network and drive is controlled through Ethernet.
	Flashing	Adapter is connected to the network but drive is not controlled through Ethernet.
LINK (PowerFlex 525 only)	Off	Adapter is not connected to the network.
	Steady	Adapter is connected to the network but not transmitting data.
	Flashing	Adapter is connected to the network and transmitting data.

LED	LED State	Description
FAULT	Flashing Red	Indicates drive is faulted.

Key	Name	Description
△ ▽	Up Arrow Down Arrow	Scroll through user-selectable display parameters or groups. Increment values.
Esc	Escape	Back one step in programming menu. Cancel a change to a parameter value and exit Program Mode.
Sel	Select	Advance one step in programming menu. Select a digit when viewing parameter value.
↵	Enter	Advance one step in programming menu. Save a change to a parameter value.

9.6 Viewing and Editing Parameters

Key	Name	Description
	Reverse	Used to reverse direction of the drive. Default is active. Controlled by parameters P046, P048 and P050 [Start Source x] and A544 [Reverse Disable].
	Start	Used to start the drive. Default is active. Controlled by parameters P046, P048 and P050 [Start Source x].
	Stop	Used to stop the drive or clear a fault. This key is always active. Controlled by parameter P045 [Stop Mode].
	Potentiometer	Used to control speed of drive. Default is active. Controlled by parameters P047, P049 and P051 [Speed Referencex].

The following is an example of basic integral keypad and display functions. This example provides basic navigation instructions and illustrates how to program a parameter.

Step	Key(s)	Example Display
1. When power is applied, the last user-selected Basic Display Group parameter number is briefly displayed with flashing characters. The display then defaults to that parameter's current value. (Example shows the value of b001 [Output Freq] with the drive stopped.)		FWD 0.00 HERTZ
2. Press Esc to display the Basic Display Group parameter number shown on power-up. The parameter number will flash.	Esc	FWD b001
3. Press Esc to enter the parameter group list. The parameter group letter will flash.	Esc	FWD b001
4. Press the Up Arrow or Down Arrow to scroll through the group list (b, P, t, C, L, d, A, f and Gx).	▲ or ▼	FWD P031
5. Press Enter or Sel to enter a group. The right digit of the last viewed parameter in that group will flash.	↵ or Sel	FWD P031
6. Press the Up Arrow or Down Arrow to scroll through the parameter list.	▲ or ▼	FWD P031
7. Press Enter to view the value of the parameter. Or Press Esc to return to the parameter list.	↵	FWD 230 VOLTS
8. Press Enter or Sel to enter Program Mode and edit the value. The right digit will flash and the word Program on the LCD display will light up.	↵ or Sel	FWD 230 VOLTS PROGRM
9. Press the Up Arrow or Down Arrow to change the parameter value.	▲ or ▼	FWD 229 VOLTS PROGRM

Step	Key(s)	Example Display
10. If desired, press Sel to move from digit to digit or bit to bit. The digit or bit that you can change will flash.	Sel	FWD 229 VOLTS PROGRM
11. Press Esc to cancel a change and exit Program Mode. Or Press Enter to save a change and exit Program Mode. The digit will stop flashing and the word Program on the LCD display will turn off.	Esc or ↵	FWD 230 VOLTS or FWD 229 VOLTS
12. Press Esc to return to the parameter list. Continue to press Esc to back out of the programming menu. If pressing Esc does not change the display, then b001 [Output Freq] is displayed. Press Enter or Sel to enter the group list again.	Esc	FWD P031

⚠WARNING

- Do not change any parameter value not indicated in this manual
- Do not set a value that exceeds a parameter range given in inverter manual
- Make sure to perform trial operation after changing a parameter value. If there is anything wrong, stop the operation immediately and check the values and correct them.

NOTICE

- To change the parameter value, refer to the inverter manual
  Before making any changes in the inverter, clear understanding of the inverter manual is required.
- KEY button operation is described based on the PF523 inverter. The inverter may be subject to change without prior notice for quality improvement.

10.Hour/Counter Meter (OPTION)

The Count/Hour (C/H) Meter located in on the electrical control panel records the hoists on time and number of starts.

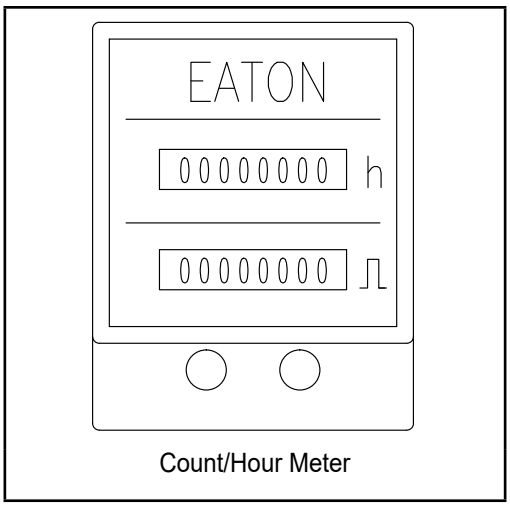

Count/Hour Meter

Contactor-The C/H Meter can be used in conjunction with the amount of jogging to estimate when the contactor(s) should be replaced. Jogging is when the pendant control buttons are pressed quickly and repetitively to move the hook in small increments. Refer to Table 1-1

<Table 1-1> Criteria for Recommended Contactor Replacement

Jogging During Normal Operation		Change Contactor After ⎍ (starts)
Rating	Approximate Jogging Frequency	
Low	Jogging is rare.	950,000
Medium	During 25% of operations / lifts	500,000
High	During 50% or more of operations/lifts	200,000

Gear Oil – The H/C meter can be used in conjunction with the average load lifted by the hoist to estimate when the gear oil should be changed. Refer to table 1-2.

<Table 1-2> Criteria for Recommended Gear Oil Replacement

Jogging During Normal Operation		Change Gear Oil After (h) (hours)
Rating	Average % of Rated Capacity	
Low	0 to 33%	360
Medium	33 to 67%	240
High	67 to 100%	120

- To change gear oil of VFD hoist, check elapsed run time of the inverter which indicates hoist operation hour. Please refer to inverter manual (PF523) of ENGLISH SECTION. (b019-Elapsed Run Time) Refer to table 1-2 as well.

11. Lug Mount Plain Trolley Kit (OPTION)

11.1 How to Install Lug Mount Plain Trolley on the Runway I-Beam

First, check the difference between beam flange width and guide roller spacing.

■ Parts to adjust I-Beam Width

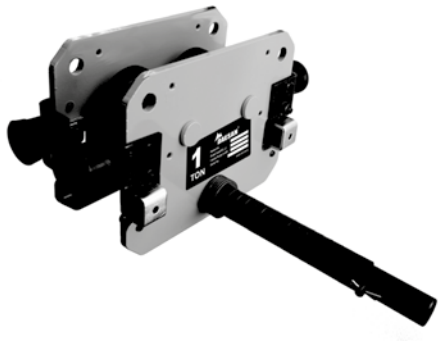

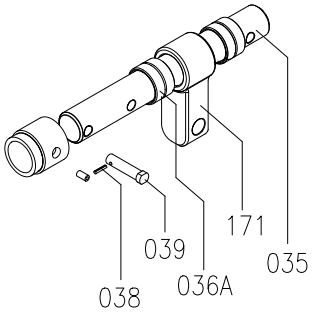

035. Shaft
036A. Adjusting Collar

038 Cotter Pin
039. Stopper Pin
171. Connector

■ How to set up the I-Beam Width of Lug Mount Plain Trolley

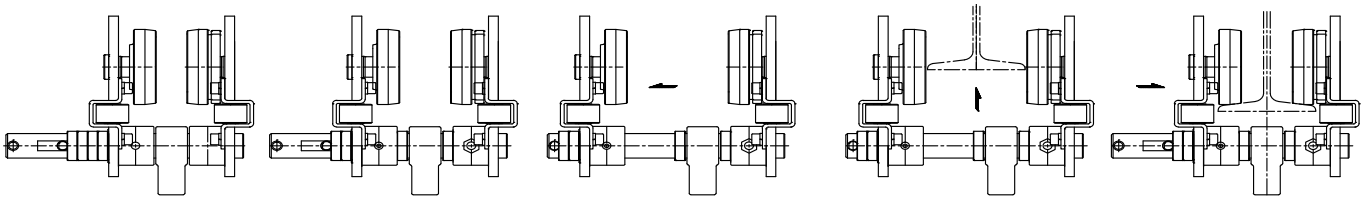

Process ① ② ③ ④ ⑤

Lug Mount Plain Trolley can be used on I-Beams different in width only by inserting adjusting collars (0 pcs to 6 pcs)

① Pull out both “039. Stopper Pin” and “036A, Adjusting Collar”
② Widen TROLLEY up to the maximum width by pulling out “035. shaft”
③ In accordance with the following I-Beam width instruction, please insert the applied number of collars at the right end and push the trolley to the direction of arrow mark.
④ Insert TROLLEY on I-Beam
⑤ Locate “171. Connector” on the center and line up “036A, Adjusting Collar” by setting the same number of collars at both ends.

12.Electric Connection Drawing

■ DST,DSTF-TYPE(1T,2T)

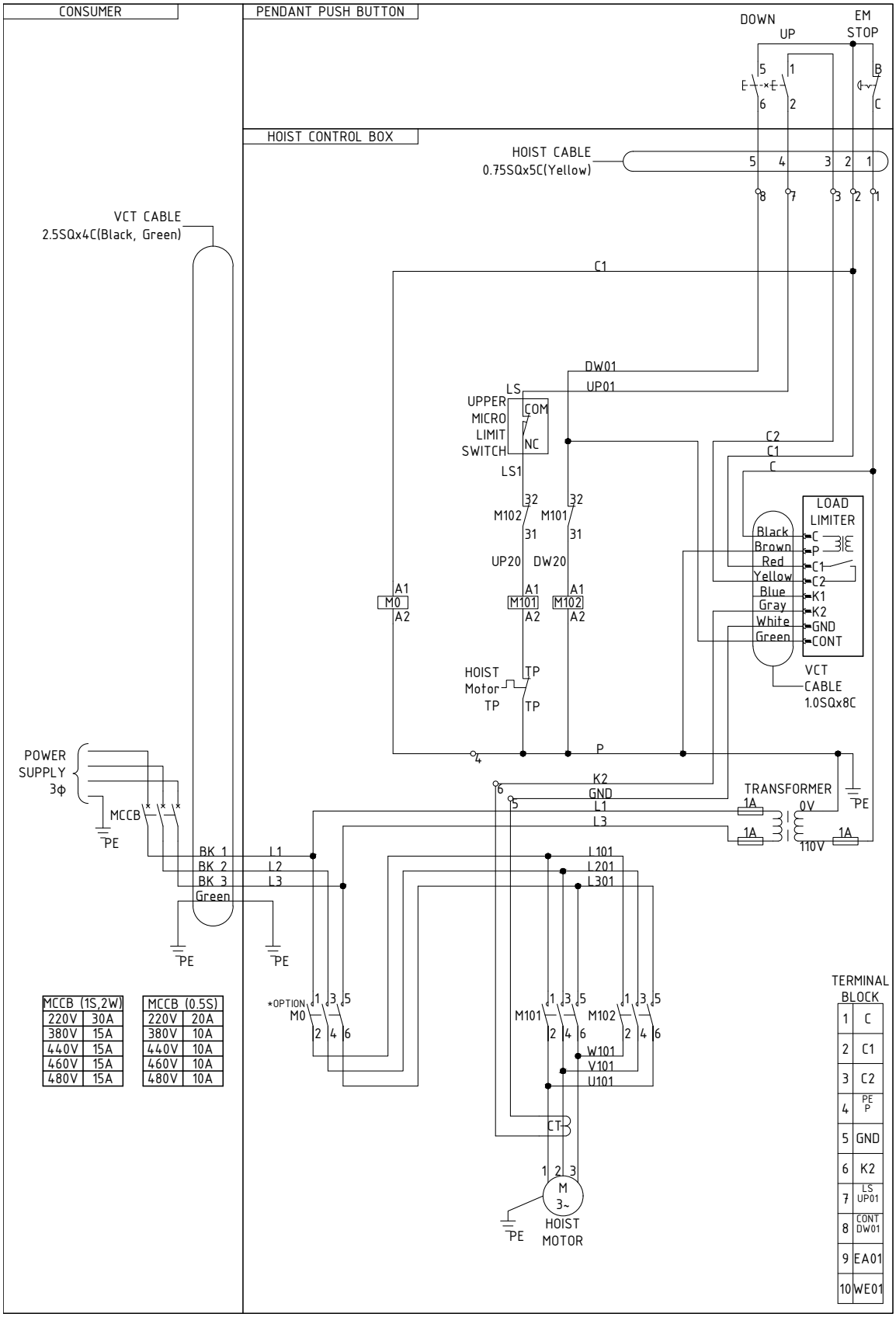

MCCB (1S,2W)	
220V	30A
380V	15A
440V	15A
460V	15A
480V	15A

MCCB (0.5S)	
220V	20A
380V	10A
440V	10A
460V	10A
480V	10A

DSTM,DSTFM-TYPE(1T,2T)

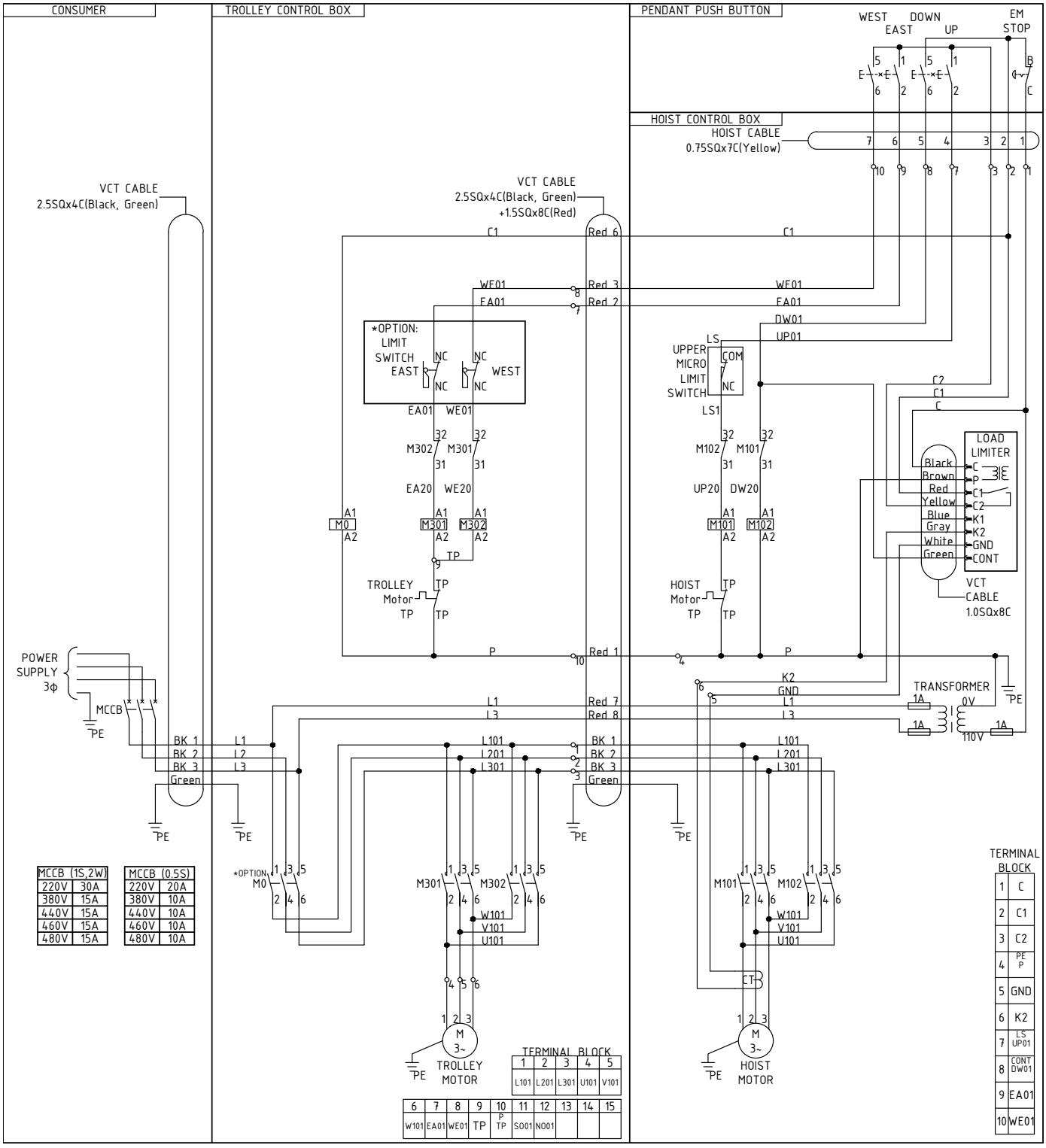

DSS-0.5S, DSS,DSSF-TYPE(1T,2T) (115V / 208~230V 60Hz)

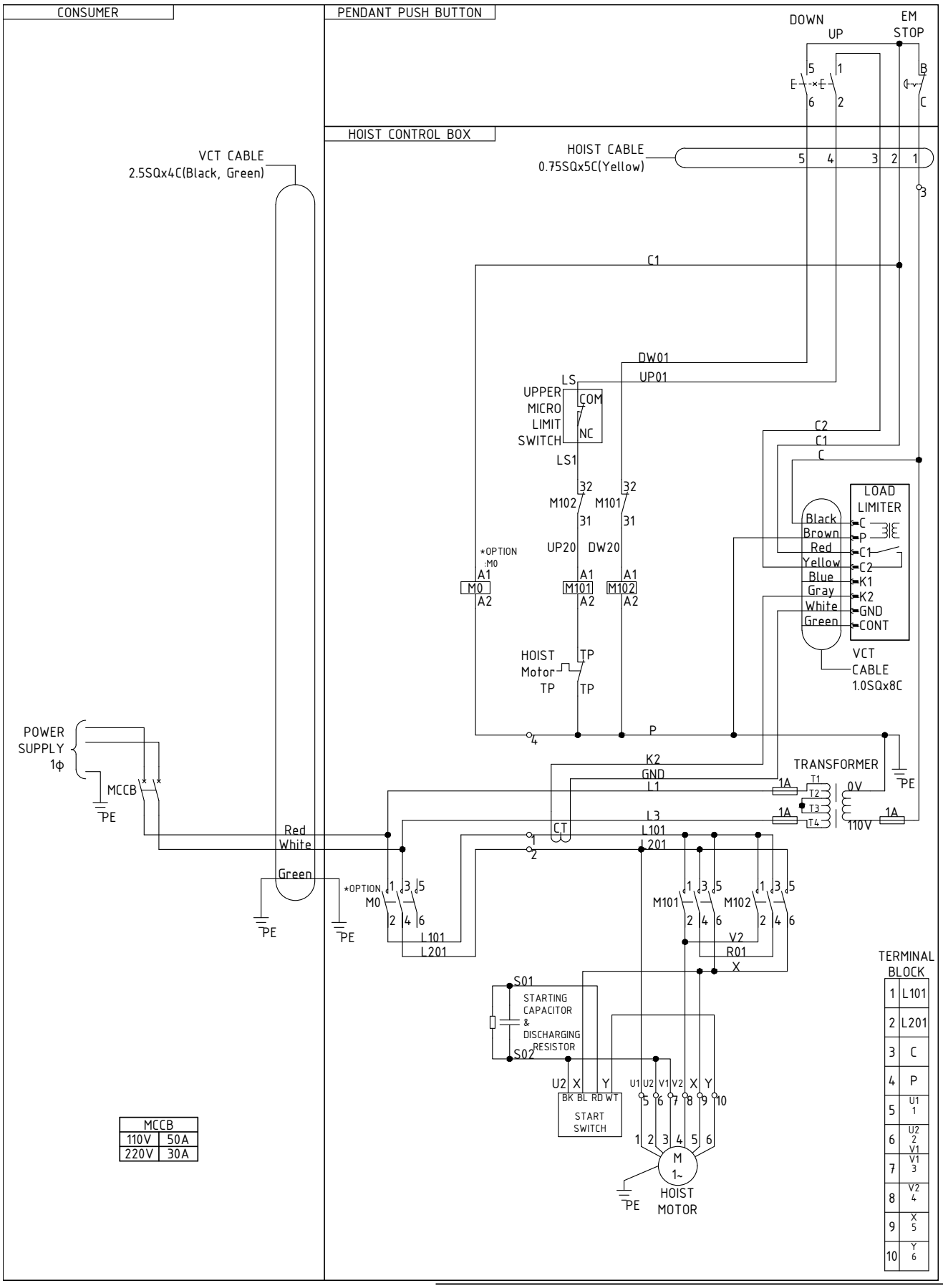

DSSM-0.5S, DSSM,DSSFM-TYPE(1T,2T) (115V / 208~230V 60Hz)

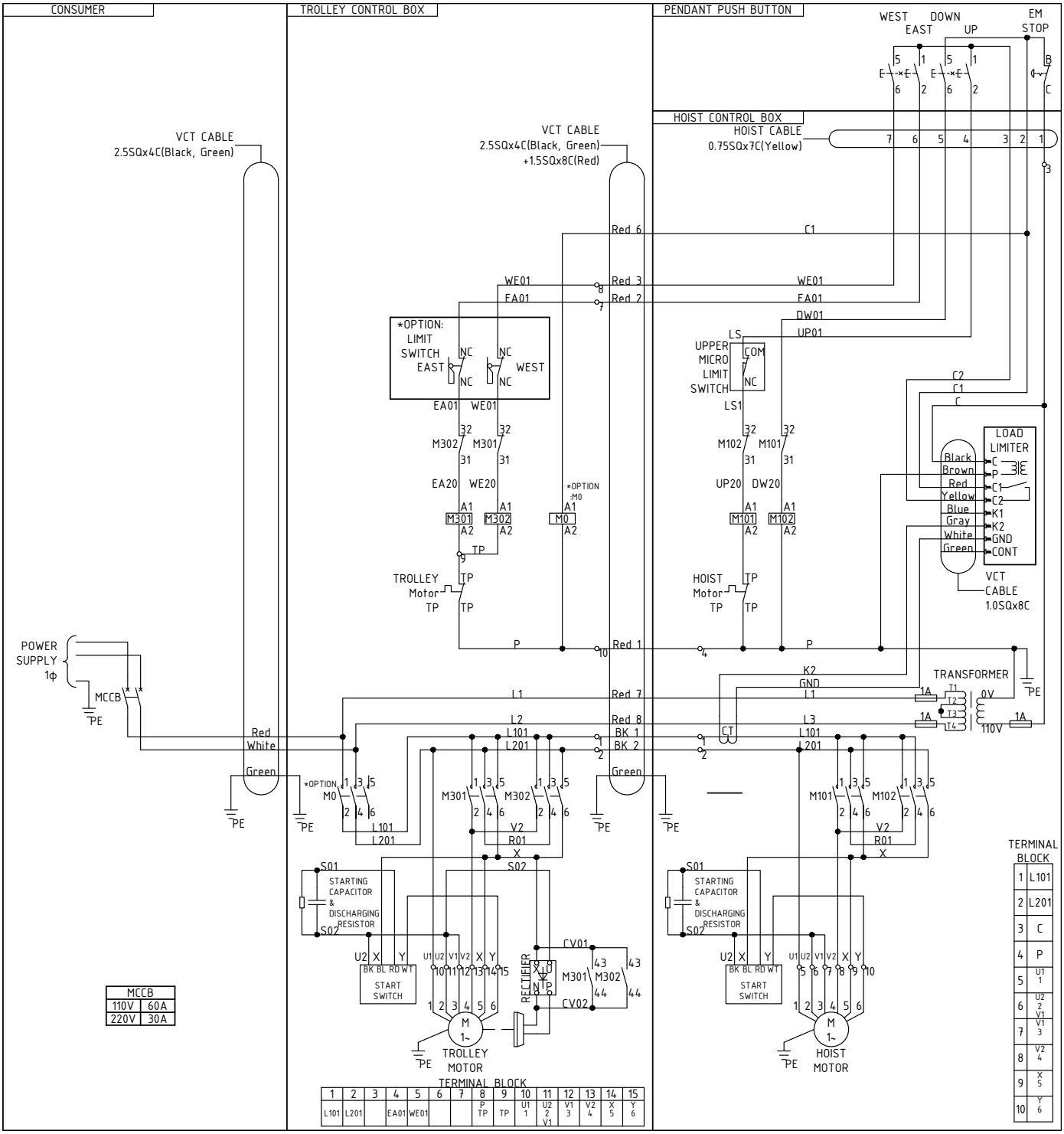

MOTORIZED TROLLEY SUSPENSION 115V / 230V (SINGLE PHASE)

MT-1, MT-2 (1Ph)

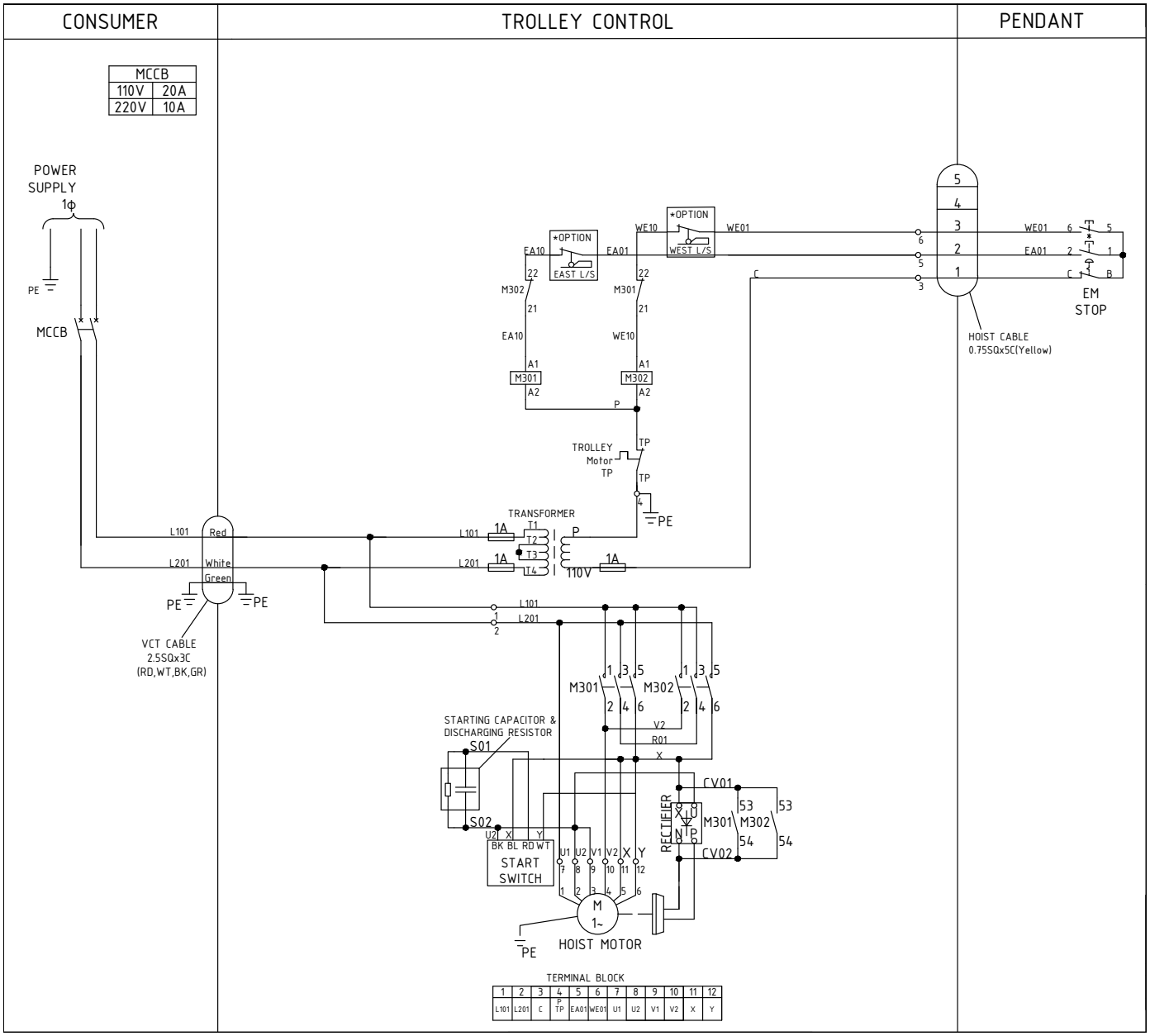

EDST,EDSTF-TYPE(1T,2T)

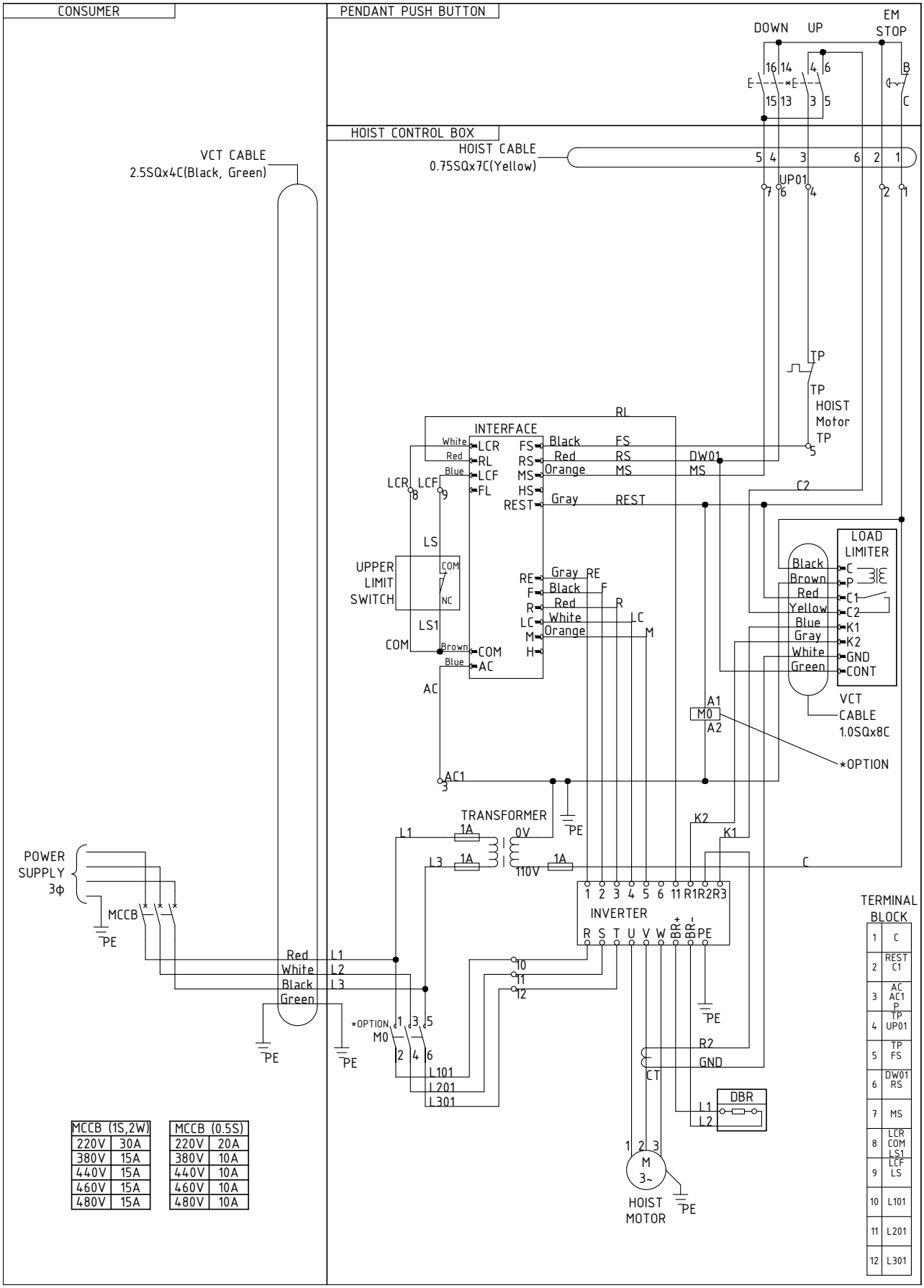

MCCB (1S,2W)	
220V	30A
380V	15A
440V	15A
460V	15A
480V	15A

MCCB (0.5S)	
220V	20A
380V	10A
440V	10A
460V	10A
480V	10A

EDSTM,EDSTFM-TYPE(1T,2T)

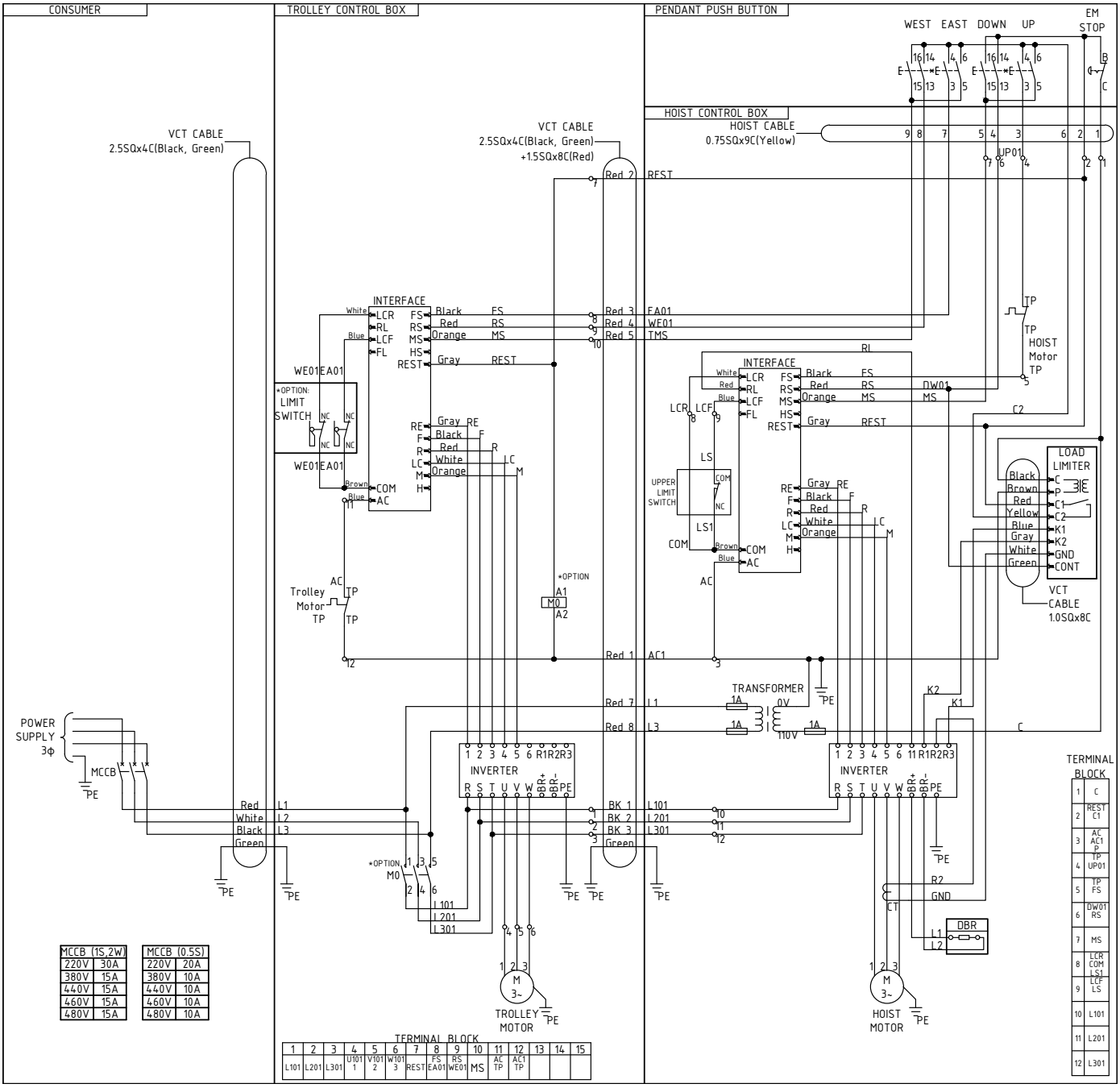

MCCB (1S,2W)	
220V	30A
380V	15A
440V	15A
460V	15A
480V	15A

MCCB (0.5S)	
220V	20A
380V	10A
440V	10A
460V	10A
480V	10A

TERMINAL BLOCK

1	2	3	4	5	6	7	8	9	10	11	12	13	14	15
L101	L201	L301	U101 1	V101 2	W101 3	REST	FS EA01	RS WE01	MS	AC TP	AC1 TP			

EDSS-0.5S, EDSS-1S, EDSS-2W, EDSS-0.5S

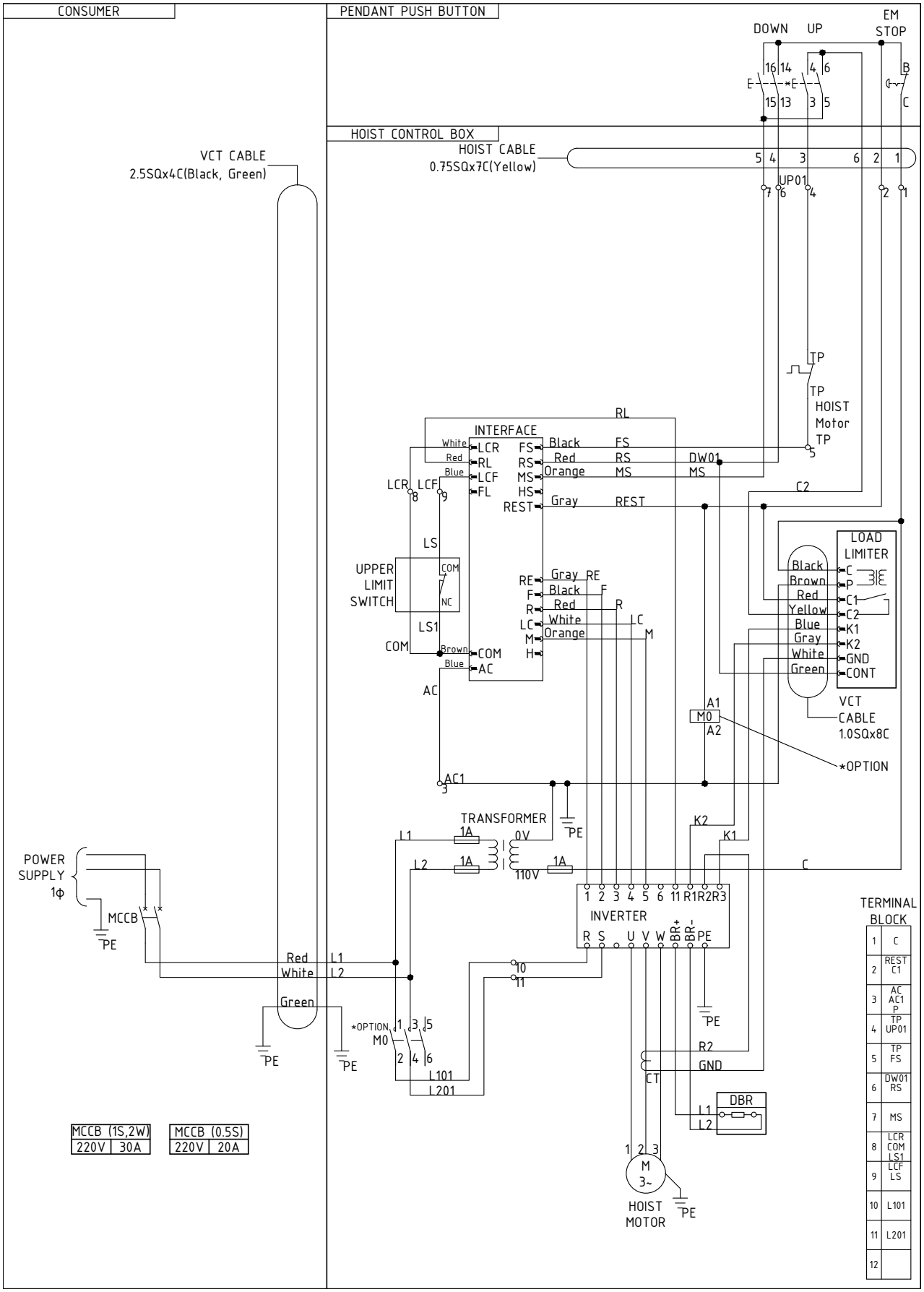

EDSSM-0.5S, EDSSM-1S EDSSM-2W

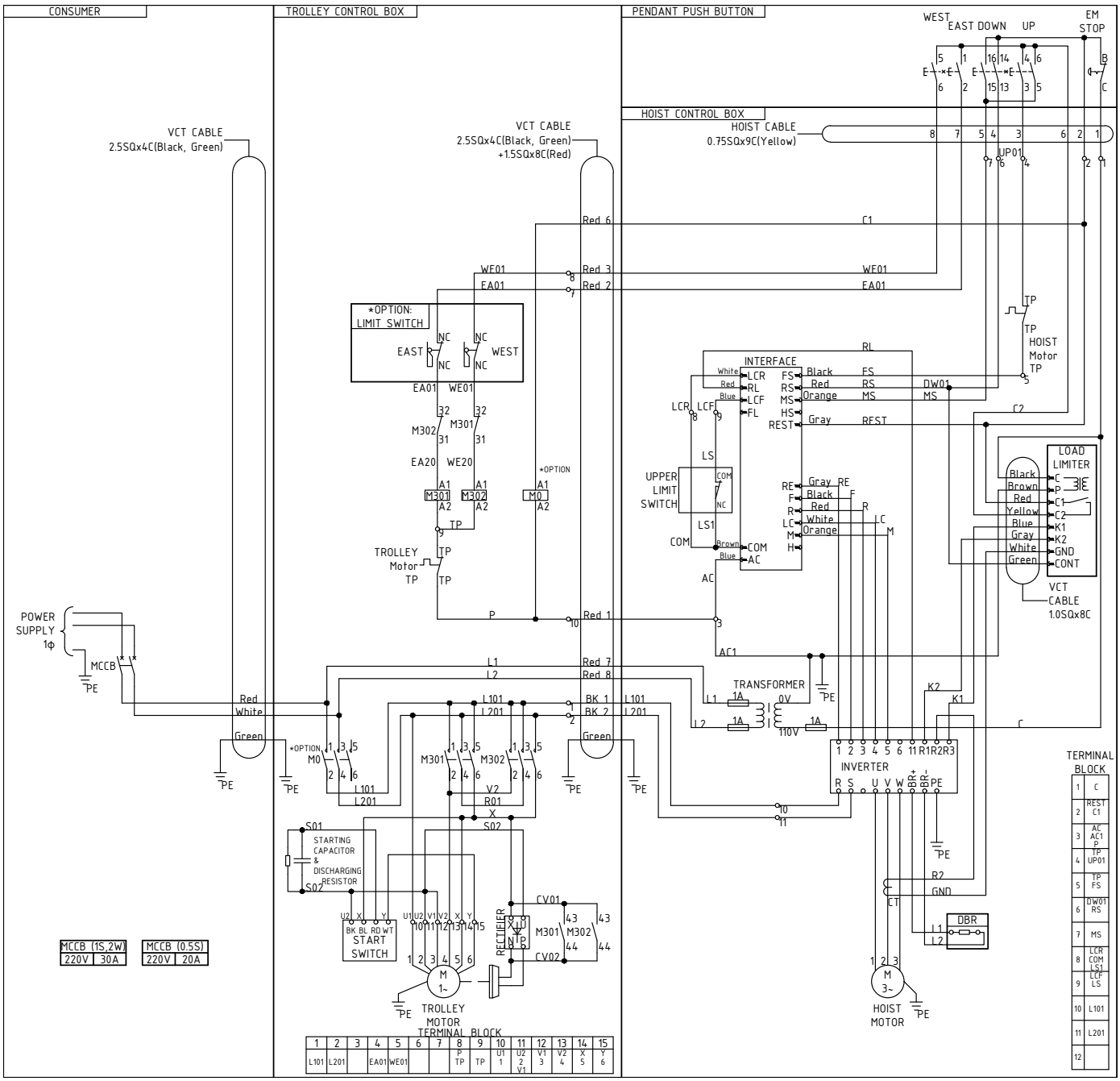

DAESAN®

GENERAL CONDITIONS OF WARRANTY

WARRANTIES : The seller warrants to the original using Buyer thereof the goods sold under this agreement free from defects in workmanship and materials for a period of one year from the date of shipment to the original using Buyer. No other express warranties are given and no affirmation of Seller or Seller's agents, by word or action, shall constitute a warranty. No warranty is made for components and accessories made by others when such items are warranted by their respective manufacturers.
Installation or operation of the equipment in any manner other than as recommended by Seller, shall void the warranty.

Any variations in details between the goods furnished herein and those covered in Buyer's specifications are due to standards of manufacture not to be construed as exceptions to the specifications.

DISCLAMER OF IMPLIED WARRANTIES :

(a) SELLER MAKES NO WARRANTY OF MERCHANTABLITY IN RESPECT TO THE GOODS SOLD UNDER THIS AGREEMENT.

(b) This sale is made WITHOUT ANY WARRANTY BY SELLER THAT THE GOODS ARE SUITABLE FOR ANY PARTICULAR PURPOSE.

(c) Buyer hereby waives all other warranties, guarantees, obligations, liabilities, rights and remedies arising by law or otherwise including any obligation or liability of the Seller arising from tort, and Buyer shall indemnify Seller from any liability, loss damage, or claim arising from Buyer's tortuous use of t he goods sold hereby.

REMEDIES :

(a) Under no conditions shall any goods be returned to Seller without its prior written consent.

(b) The Buyer's sole and exclusive remedy for breach of any warranty is limited to Seller furnishing, at its expense, duplicate or repaired parts F.O.B Seller's plant with installation at Buyer's expense if discovery of a claimed defects occurs during the allowable warranty period, and if Seller's inspection determines a defect exists.

(c) The quantity of material shown by invoice shall in all cases govern settlement for shortages, unless notice of shortage, appropriately documented, is given to the carrier and the Seller upon delivery by the Carrier.

(d) Claims for errors, deficiencies or imperfections shall be deemed waived by the Buyer unless Seller is notified in writing of the basis of such claims within 10days after discovery of claimed defect and such discovery occurs within the warranted period.

(e) Neither Buyer nor User shall be entitled under this Agreement to recover from Seller any incidental or consequential damages of any nature including but not limited to the cost of any labor expended by others in connection with the goods sold hereby by reason of any alleged nonconformity or breach of warranty on the part of the Seller, nor costs of material or account thereof, nor any lost profits whether determinable or speculative.

DAESAN®
www.daesaninotec.com

DAESAN INOTEC INC
32 32, Nonggongdangigil, Jungahn myun, Gongju Si
Chungcheongnamdo, South Kora
swkang@daesanhoist.com | ygnam@daesanhoist.com | msjeong@daesanhoist.com