DAESAN®

EME-X-DMW
AUG.2025

ELECTRIC CHAIN HOIST

INSTRUCTION MANUAL

for
Installation / Operation / Maintenance / Parts

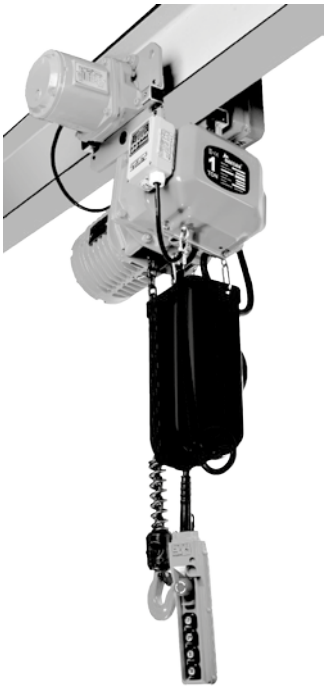

Serial Number : _____

⚠WARNING

This equipment should not be installed, operated or maintained by any person who has not read all the contents of these instructions. Failure to read and comply with these instructions or any one of the limitations noted herein can result in serious bodily injury or death, and/or property damage.
CAUTION: “To Reduce the Risk of Electric shock or Injury, Use Indoors Only”

There are no other warranties which extend beyond the description on the Order Acknowledgement and as it may apply to the specifications provided in this publication. The IMPLIED WARRANTIES OF MERCHANTABILITY AND FITNESS FOR A PARTICULAR PURPOSE ARE EXCLUDED. DAESAN shall in no event be liable for any special, direct, indirect incidental or consequential damages to anyone beyond the cost of replacement of the goods sold hereby.

* Specifications are subject to change without prior notice for improvement - Product drawings / images / parts are representative only and are subject to change for improvement

DAESAN®

Table of contents

Description	Page
1. Features	**7**
1.1 Mechanism Group	
1.2 Working Environment Data	
1.3 Hook Suspension Series, Single speed / Dual Speed (VFD Control)	
* Specification & Dimension (mm)	
1.4 Motor Trolley Mounted Series, Single speed / Dual speed (VFD Control)	
* Specification & Dimension (mm)	
1.5 Low Headroom Chain Hoist (VFD Control)	
* Specification & Dimension (mm)	
1.6 Twin Hook Chain Hoist	
* Specification & Dimension (mm)	
1.7 DSHUM-Series (Ultra Headroom Chain Hoist)	
2. General Description of Manual	**15**
2.1 Trolley Series and Classification of Electric Wiring	
3. Safety Precautions	**16**
3.1 Warning and Caution	
3.2 Name Plates and Labels on Products	
4. Installation	**19**
4.1 Checking of Product	
4.2 Installation process	
4.2.1 Checking of Electricity	
4.2.2 Installation of “BOLT with Vent Hole”	
4.2.3 Installation of Chain Container to Hoist Body	
4.2.4 Oil Lubrication on Load Chain and into Chain Container	
* Maximum Chain-Lift-Length, According to each Chain Container	
4.2.5 Checking Load Chain after Installation	
4.2.6 Incorrect Phase Checking (by exchanging one of three black lines)	
4.3 Installation of the Motorized Trolley Mounted Series	
4.3.1 How to Install Trolley on the Runway I-Beam	
* Parts to Adjust I-Beam Width	
* How to Set Up the I-Beam Width of Motorized Trolley	
* Applied Collar Numbers for Each Trolley Capacity on I-Beam	
4.3.2 How to Connect Electric Power Source (“CIS”: customer installation scope under customer responsibility)	
4.4 Initial Start-Up	
4.5 Twin Hook Chain Hoist	
4.5.1. Twin Hook Chain Hoist Overview	
4.5.2 Twin Hook Chain Hoist Configuration and Name	
4.5.3 Twin Hook Chain Hoist Specification	
4.5.4 Twin Hook Chain Hoist Beam Width and Height Adjustment Method	
5. Precautions during Operation	**28**
6. Maintenance and Servicing	**30**
6.1 Electrical Connection	
6.2 Chain Stopper in the Chain Container	
6.3 Chain Stopper Spring	
6.4 Load Chain	

6.5 Measurement of Wear and Replacement of the Load Chain
6.5.1 Checking Chain Alignment (the welded part outward from the center)
6.6 Hook
6.6.1 Measurement of Wear on the Hook (mm)
6.6.2 Chain Anchorage bolt on multiple chain fall (Model : 2W, 3W, 5W, 7.5W)
6.7 Load Sheave and Chain Guide
6.8 Dual Brake System (electric magnetic)
6.8.1 Replacement of Brake Linings
6.9 Motor
6.9.1 Motor Rating of Hoist and Trolley
6.10 Double Action Over-winding Limiter (built-in Inside)
6.11 Fuse sets
6.12 Push Button Pendant Switch – installed with Emergency stop button
6.13 Overload Alert Sound Limiter (Protector) Audible “beeping’ Sound(Optional device)
6.13.1 Features
6.13.2 How to arrange “Mode Setting”
6.13.3 Assembling Figure

7. Preventive Maintenance 46

7.1 Recommended Periodic Maintenance and Inspection Table
7.2 Lubrication
7.3 Recommended Technical Support for Various Spare Parts
7.4 Troubleshooting

8. Inverter (Power Flex 523 Adjustable Frequency AC Drive) 49

8.1 Operating Hoist (Dual speed)
8.2 Motorized Trolley Traversing (Dual Speed)
8.3 Push Button Control for Inverter Hoist
8.4 Trial Operation
8.5 Inverter Parameter Settings
8.6 Inverter Setting and Control
8.6.1 Display and Control Keys
8.6.2 Viewing and Editing Parameters
8.7 Trouble Shooting
8.8 Prevent Leakage Current & Noise Effect
8.8.1 Prevent Leakage Current problem
8.8.2 Prevent Noise Effect Problem
8.9 Maintenance and Inspection

9. Lug Mount Plain Trolley Kit (Option) 59

9.1 How to Install Lug Mount Plain Trolley on the Runway I-Beam

10. Parts Illustrations 60

10.1 Exploded View of Chain hoist Parts
10.2 Exploded View of Motor Trolley Parts
10.3 Exploded View of Hook Mounted Chain Hoist Parts for 7.5ton Capacity only
10.4 Exploded View of Trolley Mounted Chain Hoist Parts for 7.5ton Capacity only
10.5 Exploded View of Hook Mounted Chain Hoist Parts for 10ton Capacity only
10.6 Exploded View of Trolley Mounted Chain Hoist Parts for 10ton Capacity only
10.7 Exploded View of Hook Mounted Chain hoist Parts for 15ton Capacity only
10.8 Exploded View of Trolley Mounted Chain Hoist Parts for 15ton Capacity only
10.9 Exploded View of Hook Mounted Chain Hoist Parts for 20ton Capacity only
10.10 Exploded View of Trolley Mounted Chain Hoist Parts for 20ton Capacity only
10.11 Exploded View of 3 & 5ton Low Headroom Hoist (Load Block)
10.12 Exploded View of Lug Mount Trolley Kit 1,2,3,5 ton Capacity
10.13 Exploded View of Arm Block Ass'y

10.14 Exploded View of Assembled Parts
10.15 Exploded View of 3-5ton Ultralow Headroom hoist (load block)
10.16 Part List

11. Electric Wiring Diagram 92

NOTICE

TO ORDER PARTS : Provide part number, part description, quantity required, and Product Number or Serial Number of Hoist.

SAFETY ALERT SYMBOL

The Safety Alert Symbol is used in this manual to indicate hazards and to alert the reader to information that should be known, understood, and followed in order to avoid DEATH or SERIOUS INJURY.

Read and understand this manual before using the hoist.

Important issues to remember during operation are provided at the hoist control stations, at various locations on the hoist and in this manual by DANGER, WARNING, or CAUTION instructions or placards. That alert personnel to potential hazards, proper operation, load limitations, and more.

⚠DANGER Indicates an imminently hazardous situation which, if not avoided, will result in death or serious injury.

⚠WARNING Indicates a potentially hazardous situation which, if not avoided, could result in death or serious injury.

⚠CAUTION Indicates a potentially hazardous situation which, if not avoided, may result in minor or moderate injury. It may also be used to alert

⚠CAUTION

These general instructions deal with the normal installation, operation, and maintenance situations encountered with the equipment described herein. The instructions should not be interpreted to anticipate every possible contingency or to anticipate the final system, crane, or configuration that uses this equipment

This manual includes instructions and parts information for a variety of hoist types. Therefore, all instructions and parts information may not apply to any one type or size of specific hoist. Disregard those portions of the instructions that do not apply.

Record hoist serial number on the front cover of this manual for identification and future reference to avoid referring to the wrong manual for information or instructions on installation, operation, maintenance, or parts.

Use only the authorized replacement parts in the service and maintenance of this hoist.

⚠WARNING

Equipment described herein is not designed for and should not be used for lifting, supporting, or transporting humans.

Equipment described herein should not be used in conjunction with other equipment unless necessary and/or required safety devices applicable to the system or application are installed by the system designer, system manufacturer, crane manufacturer, installer, or user.

Modifications to upgrade, rerate, or otherwise alter this equipment shall be authorized only by the original equipment manufacturer or qualified professional engineer.

Equipment described herein may be used in the design and manufacture of cranes or monorails. Additional equipment or devices may be required for the crane or monorail to comply with applicable crane design and safety standards.

The System designer, system manufacturer, crane designer, crane manufacturer, installer, or user is responsible to assure that the installation and associated wiring of these electrical components is in compliance with the electrical standard of the applied country.

Failure to read and comply with any one of the limitations noted herein can result in serious bodily injury or death, and/or property damage.

⚠DANGER

HAZARDOUS VOLTAGES ARE PRESENT IN THE CONTROL BOX, OTHER ELECTRICAL COMPONENTS, AND CONNECTIONS BETWEEN THESE COMPONENTS

Before performing ANY mechanical or electrical maintenance on the equipment, de-energize (disconnect) the main switch supplying power to the equipment; and lock and tag the main switch in the de-energized position.

⚠DANGER

Do not operate the equipment without control enclosure cover or covers in place.

Only trained and competent personnel should inspect and repair this equipment

NOTICE

This manual contains information for safe operation of an overhead hoist. Taking precedence over any specific rule, however, is the most important rule of all – “USE COMMON SENSE”. Operation of an overhead hoist involves more than operating the controls. The operator must consider and anticipate the motions and actions will occur as a result of operating the controls.

If the hoist owner/user requires additional information, or if any information in the manual is not clear, contact the manufacturer or the distributor of the hoist. Do not install, inspect, test, maintain, or operate this hoist unless this information is fully understood.

When contacting manufacturer or the distributor of the hoist, always make reference to the serial number of the hoist.

A regular schedule of inspection of the hoist should be established and records maintained.

⚠WARNING

Before installing, removing, inspecting, or performing any maintenance on a hoist, the main switch shall be de-energized. Lock and tag the main switch in the de-energized. Follow other maintenance procedures outlined in this manual

Additional WARNINGS are listed in various portions of this manual. Personnel shall read and follow these WARNINGS. Failure to read and comply with these WARNINGS as well as other instructions or any limitations noted in this manual could result in serious bodily injury or death, and/or property damage.

1. Features

DAESAN heavy-duty hoists feature faster speeds and higher capacities than conventional hoists. Workers in automotive plants, heavy equipment manufacturing, paper mills, and related rugged working environments will experience dependability and versatility. Careful consideration has been given to optimize performance.
All hoists are equipped with quality parts and mechanisms to provide proper lifting and traversing of the load. Components undergo numerous tests and inspections, while our production processes meet stringent quality requirements.

- ✓ Brake System ---------- by electro-magnetic brake
- ✓ Overload Alert Sound Limiter---------- with “beep” sound when overloaded.
- ✓ Double Action Over-winding Limiter---------- Preventing over-lifting or lowering of chain
- ✓ Push Button Pendant Control Switch-------- with emergency stop button

1.1 Mechanism Group

DAESAN Electric Chain Hoists are allocated to mechanism groups in accordance with the following regulations. Under the allowance of the following mechanism groups, the hoist should be operated and should not exceed the nominal values. On each identification plate, the following is indicated.

Hook suspension chain hoist <3phase> : FEM 9.511 (Hoist = FEM 2m 40% ED)
Motor trolley mounted chain hoist <3phase> : FEM9.511(Hoist/Trolley = FEM2m / 1Bm 40%/25%ED)

- FEM Mechanism Group 9.511 (Rules for Design of Serial Lifting Equipment : Classification of Mechanism)

Mechanism group	1 Bm	1 Am	2 m	3 m	4 m	5 m
Light group	Average operating period per day (h)					
Light **k < 0.50**	2	2-4	4-8	8-16	16	-
Medium **0.50 < k < 0.63**	1	1-2	2-4	4-8	8-16	16
Heavy **0.63 < k < 0.8**	0.5	0.5-1	1-2	2-4	4-8	8-16
Very Heavy **0.8 < 1.00**	0.25	0.5	0.5-1	1-2	2-4	4-8

Cubic Mean Value (k) refers to percentage of W.L.L. (Working load limit). Ex: k = 0.63 means 63% of W.L.L.

NOTICE

DAESAN electric chain hoists should be operated under the allowance of the above FEM determination. The above mechanism group is valid for the entire period of operation, and for reasons of operational safety, hoists shall not be operated outside these recommendations.

1.2 Working Environment Data

- ✓ Ambient temperature : from -20 °C to 40°C
- ✓ Protection class : IP54
- ✓ Side pulling angle : max. 3 degrees
- ✓ Sound level : 80dB (A)

⚠WARNING

DAESAN electric chain hoists are designed for indoor use. For outdoor use, the hoist shall be located under roof to assure rainproof operation. The operator SHALL

- ✓ NOT expose the hoist to rain or condensation
- ✓ NOT store the hoist in a humid place
- ✓ COVER the hoist or MOVE it back under roof after use, when it is used outdoors
- ✓ HANG the hoist on a suitable beam or crane or from the ceiling

⚠CAUTION

If the above normal operation conditions are exceeded, or the electric hoist is operated often under adverse conditions, the information in the operating instructions must be adapted accordingly. In this case the manufacturer is to be consulted.

1.3 Hook Suspension Series, Single speed / Dual Speed (VFD Control)

* Specification

MODEL	DSA (Single speed)		1S	1.5S	2W	2S	2.5S	3S	3W	5W	7.5W	10W	15W	20W
	EDSA (Dual speed) VFD Control		1S	1.5S	2W	2S	2.5S	3S	3W	5W	7.5W	10W	15W	20W
Capacity (WLL)	ton		1	1.5	2	2	2.5	3	3	5	7.5	10	15	20
Chain falls			1		2	1	1	1	2	2	3	4	6	8
Standard lift	m		4				5							
Pushbutton cord length	m		3.5				4.5							
Lifting speed (50/60hz)	m/min	SINGLE SPEED	6.8/8.2	8.6/10.3	3.4/4.1	6.7/8.1	5.4/6.5		4.35/5.15	2.75/3.25	1.8/2.1	2.75/3.25	1.8/2.1	1.3/1.6
		DUAL SPEED	2.2~6.4	3.0~9.2	1.1~3.2	2.2~6.5	2.7~6.5		1.5~4.6	1.35~3.25	0.9~2.1	1.35~3.25	0.9~2.1	0.67~1.6
Lifting motor	kw		1.8	3.5	1.8	3.5						3.5X2		
Voltage	v		220 / 380 / 440 (request for special voltage)											
Load chain (dia x pitch)	mm		7.1X21	9.5X28.6	7.1X21	11.2X34			9.5X28.6	11.2X34				
Net weight	kg	DSA	72	118	85	121	127		147	167	274	407	796	901
		EDSA	74	120	87	123	129		149	169	276	411	800	905
Weight for additional 1m lift	kg		1.3	2.6	2.4	2.86			4.12	5.52	8.18	10.84	16.16	21.48

WLL (working load limit) : All units tested at 125% of the rated capacity.
Longer lifts affect the chain container size. Please contact the factory or the authorized distributor.

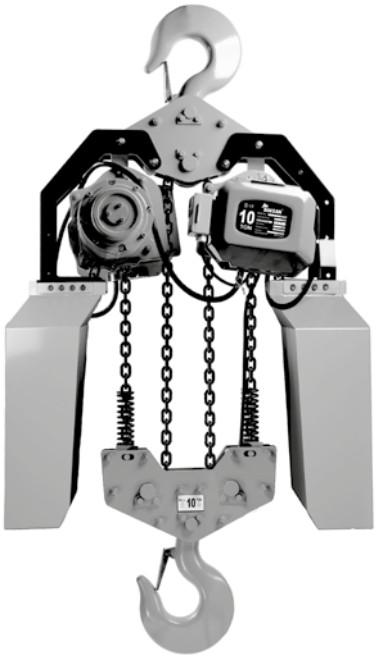

* Dimension (mm)

MODEL	DSA (Single speed)		1S	1.5S	2W	2S	2.5S	3S	3W	5W	7.5W	10W	15W	20W
	EDSA (Dual speed) VFD Control		1S	1.5S	2W	2S	2.5S	3S	3W	5W	7.5W	10W	15W	20W
H: MINIMUM HEADROOM	A	SINGLE	572	671	572	671						716	764	806
		DUAL	652	738	652	738						760	898	940
	B		307	358	307	358						380	449	470
												380	449	470
	C	SINGLE	274	313	274	313						380	449	470
		DUAL	345	380	345	380						380	449	470
	D		300	370	300	370					538	1032	1152	
	*D2		357	430	357	430					N/A			
	E		170	198	219	198			258	273	325	418	426	
	F		130	172	82	172			112	102	213	418	426	
	M		35	53.5			60			70	90	120		
	H		566	715	805	755	775		945	1060	1440		1790	
	L		405	483	490	483	490		560	580	740	822	933	

Single Chain-fall

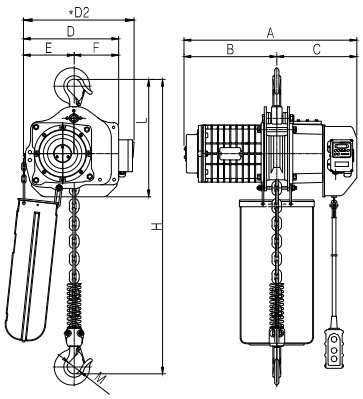

Double Chain-fall

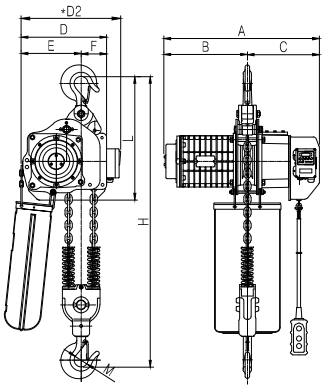

Three Chain-fall

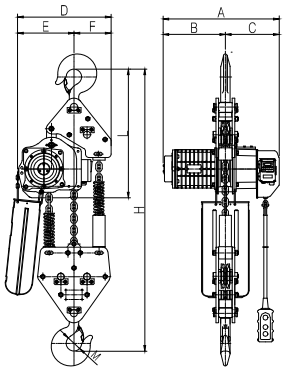

Four Chain-fall

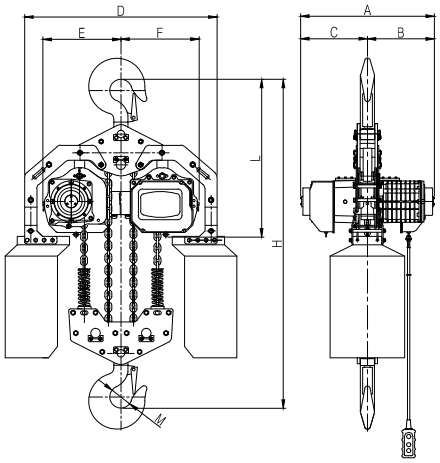

Six&Eight Chain-fal

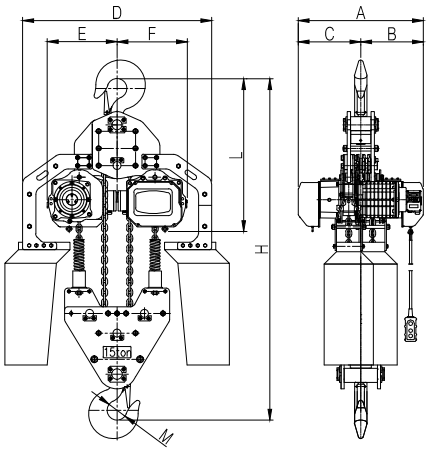

1.4 Motor Trolley Mounted Series, Single speed / Dual speed (VFD Control)

* Specification

MODEL	DSM (Single speed)		1S	1.5S	2W	2S	2.5S	3S	3W	5W	7.5W	DSMS 7.5W	10W	DSMS 10W		15W	20W
	EDSM (Dual speed) VFD Control		1S	1.5S	2W	2S	2.5S	3S	3W	5W	7.5W	EDSMS 7.5W	10W	EDSMS 10W		15W	20W
Capacity (WLL)	ton		1	1.5	2		2.5	3		5	7.5		10			15	20
Chain falls			1		2	1			2		3		4			6	8
Standard lift	m		4				5										
Pushbutton cord length	m		3.5				4.5										
Lifting speed (50/60hz)	m/min	SINGLE	6.8/ 8.2	8.6/ 10.3	3.4/ 4.1	6.7/8.1	5.4/6.5		4.35 /5.15	2.75 /3.25	1.8/2.1		2.75/3.25			1.8/2.1	1.3/1.6
		DUAL	2.2~.6.4	3.0~9.2	1.1~3.2	2.2~6.5	2.7~6.5		1.5~4.6	1.35~3.25	0.9~2.1		1.35~3.25			0.9~2.1	0.67~1.6
Traversing speed (50/60hz)		SINGLE	12 /15				11/14					8.3/10	11/14		8.3/10	8.3/10	
		DUAL	5.2~15.2									3.3~10	5.2~15.2		3.3~10	3.3~10	
Lifting motor	kw		1.8	3.5	1.8	3.5							3.5X2				
Traversing motor	kw		0.4					0.75			0.75x2						
Voltage	v		220 / 380 / 440 (request for special voltage)														
Load chain (dia x pitch)	mm		7.1X21	9.5X28.6	7.1X21	11.2X34			9.5X28.6	11.2X34							
Net weight	kg	DSM	105	162	128	169	201		221	254	518		657			1066	1171
		EDSM,	109	166	132	173	205		225	258	522		663			1074	1179
I Beam flange width	mm		75~125	100~150						125~175						150~190	175~190
I Beam min, curve radius	mm		800				1000			1800	N/A	2000	N/A	2000		N/A	N/A
Weight for additional 1m lift	kg		1.38	2.24	2.48	2.94			4.2	5.6	8.26		10.92			16.24	21.56

WLL (working load limit) : All units tested at 125% of the rated capacity.
Longer lifts affect the chain container size. Please contact the factory or the authorized distributor.

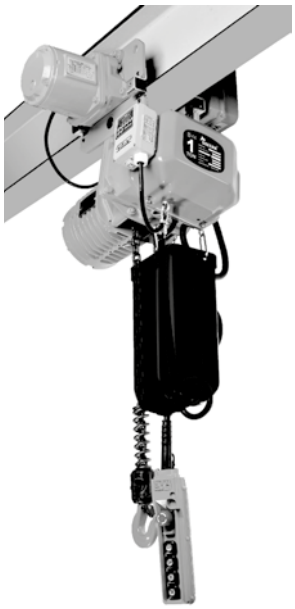

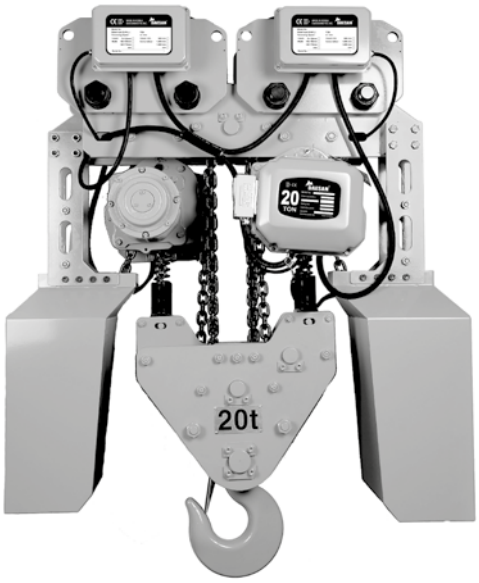

* Dimension (mm)

MODEL	DSM (Single speed)		1S	1.5S	2W	2S	2.5S	3S	3W	5W	7.5W	DSMS 7.5W	10W	DSMS 10W	15W	20W
	EDSM (Dual speed) VFD Control		1S	1.5S	2W	2S	2.5S	3S	3W	5W	7.5W	EDSMS 7.5W	10W	EDSMS 10W	15W	20W
	A	SINGLE	498+2B	527+2B		552+2B				585+2B		643+2B	585+2B	643+2B	664+2B	689+2B
		DUAL	588+2B	617+2B		642+2B				675+2B		733+2B	675+2B	733+2B	754+2B	779+2B
	B		290+B	304+B		328+B				343+B		386+B	343+B	386+B	396.5+B	409+B
	C	SINGLE	208+B	223+B		224+B				242+B		257+B	242+B	257+B	267.5+B	280+B
		DUAL	298+B	313+B		314+B				332+B		347+B	322+B	347+B	357.5+B	370+B
	D	SINGLE	170	198	219	198			258	273	N/A		358		378	402.5
		DUAL											380		445	473
	E	SINGLE	130	172	82	172			112	102	N/A		358		378	402.5
		DUAL											380		445	473
	E2		60							56	N/A					
	F		298	315			360			410	860	530	1300	N/A	1416	
	G		110	126			140			156	N/A		1098	824	1095	
	I		307	358	307	358							850	530	1070	
	J		274	313	274	313							N/A			
			345	380	345	380							N/A			
■ B Calculation *B = 1/2 x (I-Beam)	K		165	161			156			160		185	160	184		
	M		35	53.5			60			70	90		120			
■ H: minimum headroom	H		593	700	782	738	762		934	1062	1260	1245	1240	1267	1500	
	L		405	460	477	460	465		532	595	587	575	648	643	617	

Single Chain-fall

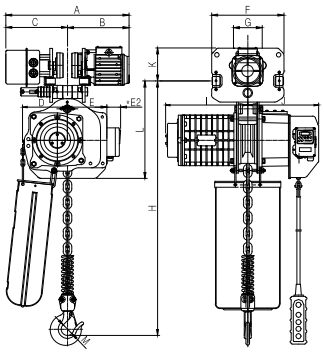

Double Chain-fall

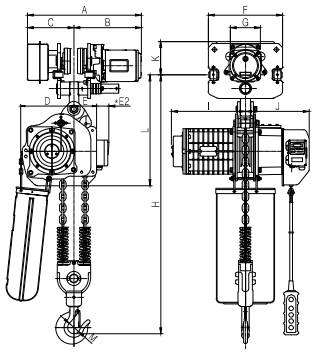

Three Chain-fall

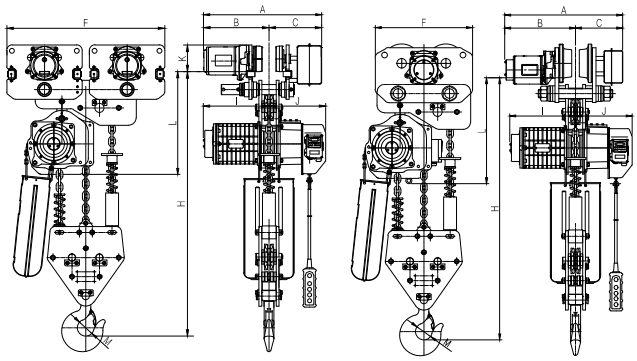

Four Chain-fall

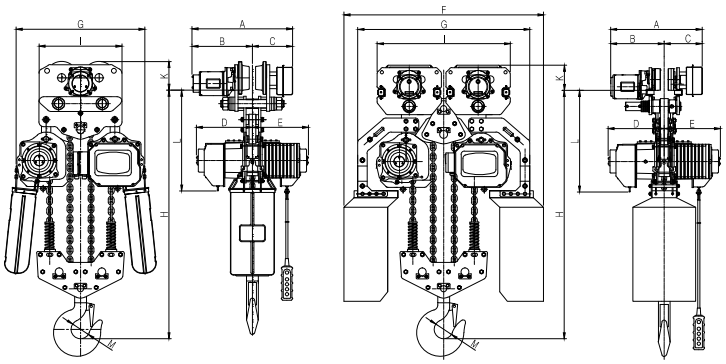

Six&Eight Chain-fall

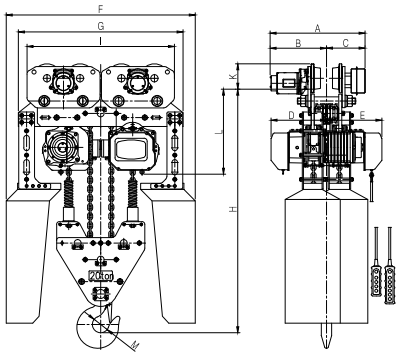

1.5 Low Headroom Chain Hoist (VFD Control)

* Specification

MODEL		SINGLE SPEED	DSHM-1S	DSHM-1.5S	DSHM-2W	DSHM-2S	DSHM-2.5S	DSHM-3S	DSHM-3W	DSHM-5W
		DUAL SPEED(VFD)	EDSHM-1S	EDSHM-1.5S	EDSHM-2W	EDSHM-2S	EDSHM-2.5S	EDSHM-3S	EDSHM-3W	EDSHM-5W
Capacity	ton		1	1.5	2	2	2.5	3	3	5
Chain falls	no		1	1	2	1	1	1	2	2
Standard lift	m		4				5			
Push button cord	m		3.5				4.5			
Lifting speed(50/60hz)	m/min	SINGLE SPEED	6.8/8.2	8.6/10.3	3.4/4.1	6.7/8.1	5.4/6.5		4.35/5.15	2.75/3.25
		DUAL SPEED	2.2~6.4	3.0~9.2	1.1~3.2	2.2~6.5	2.7~6.5		1.5~4.6	1.35~3.25
Traversing speed(50/60hz)	m/min	SINGLE SPEED	12/ 15						11/ 14	
		DUAL SPEED	5.2~15.2							
Hoist motor output	kw		1.8	3.5	1.8	3.5				
Trolley motor output	kw		0.4				0.75			
Load chain (dia x pitch)	mm		7.1X21	9.5X28.6	7.1X21	11.2X34			9.5X28.6	11.2X34
I-beam applied width	mm		75-125	100-150						125-175
I-beam min. curve radius	mm		N/A							
Weight	kg		1.38	2.2	2.48	2.94			4.2	5.6

* Dimension (mm)

MODEL	SINGLE SPEED	DSHM-1S	DSHM-1.5S	DSHM-2W	DSHM-2S	DSHM-2.5S	DSHM-3S	DSHM-3W	DSHM-5W
	DUAL SPEED (VFD)	EDSHM-1S	EDSHM-1.5S	EDSHM-2W	EDSHM-2S	EDSHM-2.5S	EDSHM-3S	EDSHM-3W	EDSHM-5W
B calculation B = 1/2 x (I-Beam width (mm)) H : minimum headroom	A	780	864	808	864	889			907
	B	254+B	268/304+B			328+B			343+B
	C	254+B	223/269+B			224+B			242+B
		298+B	313+B			318+B			332+B
	D	307	358	307	358				
	E	274	313	274	313				
		345	380	345	380				
	G	200	167		229	251		191	208
	H	435	441	545	483	496		600	690
	I	505	556	510	556	558			565
	J	24	30			35			43.5
	M	35	53.5			60			70

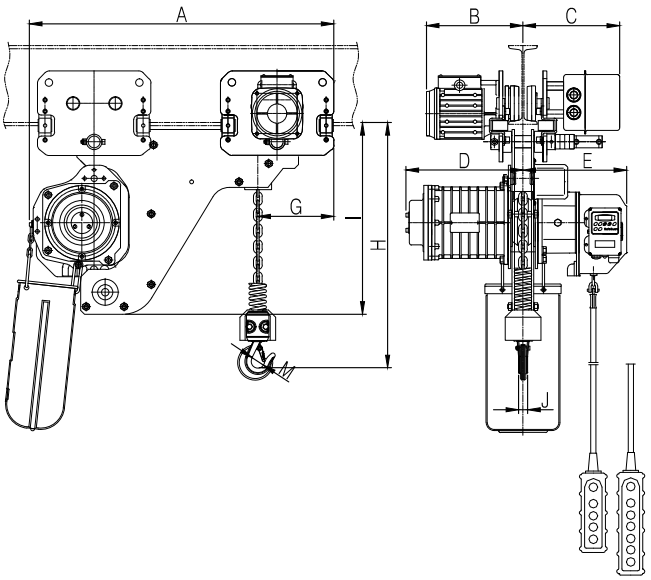

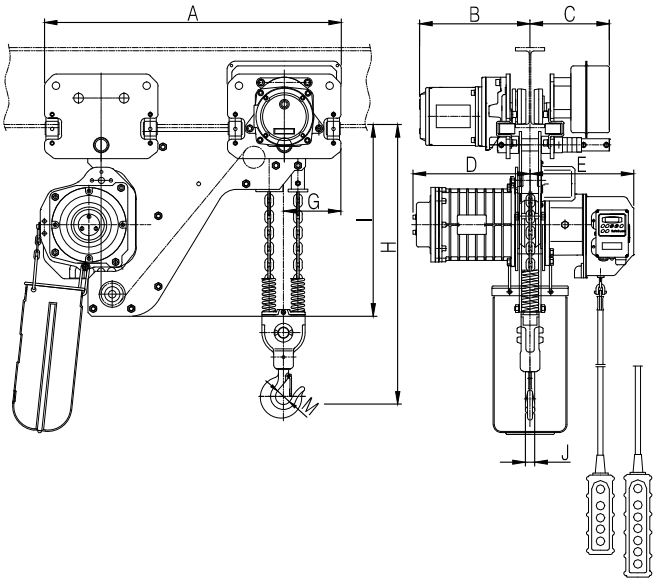

1.6 DSDH Series (Twin Hook Chain Hoist)

* Specification

MODEL	SINGLE SPEED	DSDH(M)-1S	DSDH(M)-1.5S	DSDH(M)-2W	DSDH(M)-2S	DSDH(M)-2.5S	DSDH(M)-3S	DSDH(M)-3W	DSDH(M)-5W
	DUAL SPEED(VFD)	EDSDH(M)-1S	EDSDH(M)-1.5S	EDSDH(M)-2W	EDSDH(M)-2S	EDSDH(M)-2.5S	EDSDH(M)-3S	EDSDH(M)-3W	EDSDH(M)-5W
Capacity ton		1	1.5	2		2.5	3		5
Voltage V		220/380/440(Special voltage inquiry)							
Standard lift m		4				5			
Push button cord m		3.5				4.5			
Chain falls no		1		2	1			2	
Lifting speed(50/60hz) m/min	SINGLE SPEED	6.8/8.2	8.6/10.3	3.4/4.1	6.7/8.1	5.4/6.5		4.35/5.15	2.75/3.25
	DUAL SPEED	2.2~6.4	3.0~9.2	1.1~3.2	2.2~6.5	2.7~6.5		1.5~4.6	1.35~3.25
Traversing speed(50/60hz) m/min	SINGLE SPEED	12/ 15					11/ 14		
	DUAL SPEED	5.2~15.2							
Lifting motor kw		1.8	3.5	1.8	3.5				
Load chain (dia x Pitch) mm		7.1x21	9.5x28.6	7.1x21	11.2x34			9.5x28.6	11.2x34
Weight for additional 1m lift kg	SINGLE SPEED	2.4	4.12	4.6	5.52			8.04	10.84
	DUAL SPEED	2.48	4.2	4.68	5.6			8.12	10.92
I-beam flange width mm		75-125	100-150						125-175
I-beam min. curve radius mm		Please inquire separately when ordering							
* H : minimum headroom	A	274	313	274	313				
		345	380	345	380				
	B	307	358	307	358				
	C	205	232	257	232			296	312
	D	378	448	378	448				
	E	52	56	70	55			87	99
	F	G+C+150	G+C+157.5			G+C+180			G+C+205
	G	600-4000							
	H	673	823	805	863	886		935	1060
	I	686	807	782	847	875		930	1085
	J	23.5	39			45			56
	K	35	53.5			60			70
	L	24	30			35			43.5
	M	71	90	71	90				

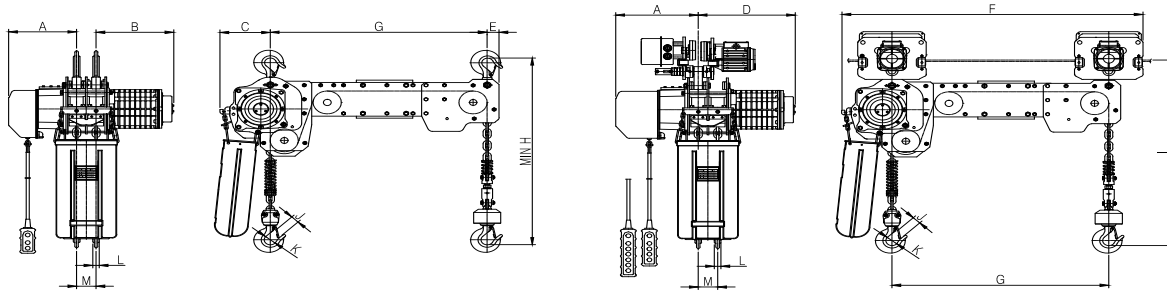

1.7 DSHUM-Series(Ultralow Headroom Chain Hoist)

* Specification

MODEL		SINGLE SPEED	DSHUM-3W	DSHUM-5W
		DUAL SPEED(VFD)	EDSHUM-3W	EDSHUM-5W
Capacity(WLL)	ton		3	5
Lifting Motor	voltage		220/380/440(Special voltage inquiry)	
Standard lift	m		4	
Load Chain Fall	no.		2	
Lifting speed(50/60hz)	m/min	SINGLE SPEED	2.75/3.25	
		DUAL SPEED	1.35 ~ 3.25	
Traversing speed(50/60hz)	m/min	SINGLE SPEED	11/ 14	
		DUAL SPEED	5.2~15.2	
Lifting motor	kw		3.5	
Traversing Motor	kw		0.75	
Load Chain Dia x Width	mm		11.2 x 34	
Beam Flange Width	mm		125 - 175	
I-beam flange width	mm		BLANKS	
Weight for additional 1m lift	kg / m		5.6	
Weight	m	SINGLE SPEED	529	530
		DUAL SPEED	534	535
* B :1/2 (I-Beam width)	A		1475	
	B		745	
	C		430	
	D		780	
	E		383	
	F		225	
	G		60	70
	H		378	400
	I		414+B	
	J	SINGLE SPEED	513+B	
		DUAL SPEED	580+B	
	K		35	43.5

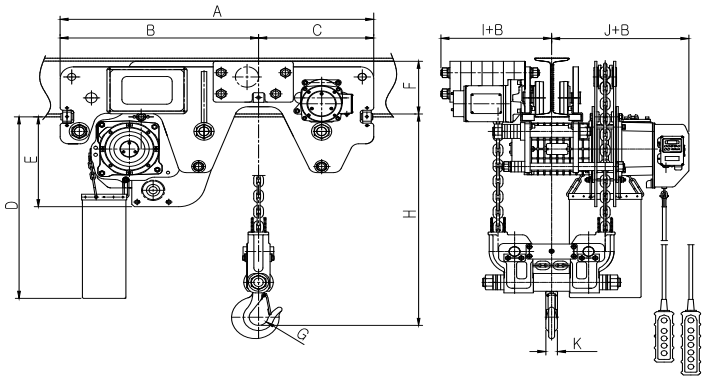

2. General Description of Manual

The product is supplied together with the manual that is important to keep readily accessible

- ✓ During installation or set-up
- ✓ For training operators & the maintenance of the equipment
- ✓ For “Safety Precautions” & Operation instructions

2.1 Trolley Series and Classification of Electric Wiring

DAESAN trolleys are designed to form an integral hoist/trolley combination, keeping the load equally distributed for easy traversing and long life.

Hook suspension trolleys are available as push/pull and hand-geared versions. A lug mounted push/pull trolley is also available for easy mounting to the hoist by removing the top hook and bolting in the supplied lug connector.

Motor Trolley

Geared Trolley

Lug Mount Plain Trolley Kit

*** Rubber bumper is an optional item**

Hook Suspension Hoist

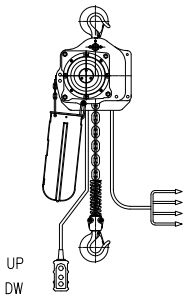

Plain Trolley Hoist
Geared Trolley hoist

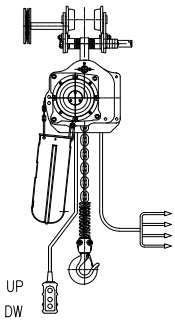

Plain Trolley Crane-mounted
Geared Trolley Crane-mounted

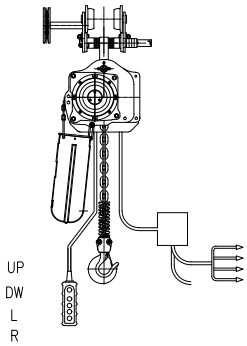

3. Safety Precautions

3.1 Warning and Caution

The Safety Alert Symbol is used in this manual to indicate hazards and to alert the reader to information that should be known, understood, and followed in order to avoid **SERIOUS BODILY INJURY OR DEATH and/or PROPERTY DAMAGE**.

⚠WARNING

WARNING symbol indicates a potentially hazardous situation, which, if not avoided, could result in death or serious injury. To avoid such a potentially hazardous situation, THE OPERATOR SHALL

* NOT operate a damaged, malfunctioning or unusually performing hoist.
* NOT operate the hoist until you have thoroughly read and understand the manual.
* NOT operate a hoist which has been modified without the manufacturer's approval.
* NOT lift more than rated load for the hoist.
* NOT use hoist with twisted, kinked, damaged, or worn load chain.
* NOT use the hoist to lift, support, or transport people, nor lift or transport loads over or near people
* NOT operate unless load is centered under hoist.
* NOT attempt to lengthen the load chain or repair damaged load chain.
* Protect the hoist's load chain from weld splatter or other damaging contaminants.
* NOT operate hoist when it is difficult to form a straight line form hook to hook in the direction of loading.
* NOT use load chain as a sling, or wrap chain around the load.
* NOT apply the load to the tip of the hook or to the hook latch
* NOT apply load unless load chain is properly seated in the chain sheave pockets.
* NOT apply load if bearing prevents equal loading on all load supporting chains.
* NOT operate beyond the limits of the load chain travel.
* NOT leave load supported by the hoist unattended unless specific precautions have been taken.
* NOT allow the load chain or hook to be used as an electrical or welding ground.
* NOT allow the load chain or hook to be touched by a live welding electrode.
* NOT remove or obscure the warnings on the hoist.
* NOT operate a hoist on which the safety placards or decals are missing or illegible.
* NOT operate a hoist unless it has been securely attached to a suitable support.
* NOT operate a hoist unless load slings or other approved single attachments are properly sized and seated in the hook saddle.
* Take up slack carefully – make sure load is balanced and load holding action is secure before continuing
* Shut down a hoist that malfunctions or performs unusually and report such malfunction.
* Make sure hoist limit switches function properly.
* Warn personnel of an approaching load.

⚠CAUTION

Read and understand this manual before using the hoist. Taking precedence over any specific rule, however, is the most important rule of all : “USE COMMON SENSE”

It is the responsibility of the owner / user to

1) Install, inspect, test, maintain, and operate the hoist in accordance with the instruction manual furnished by the manufacturer of the hoist..
2) Train and designate hoist operators, and
3) Train and designate hoist inspector / maintenance personnel
4) Relevant training is needed for operating personnel.
5) The user shall ensure that the operating personnel are given the necessary training
6) The operator shall always work in compliance with the operating instuctions
7) The user shall lift the load from the ground with the minimum speed available at the hoist
   The rope (chainm belft) shall be tightended and shall not be in the slack-condition when the load is being lifted from the ground
8) It is forbidden to lift loads above the rated capacity of the hoist
9) Do not try to lift ficed or obstrcted loads
10) Do not side-pull loads
11) Excessive inching (e.g. giving short pulses to the motor) shall be avoided
12) Ban on transporting persons

3.2 Name Plates and Labels on Products

All labels and name plate shall be attached on the products at the same position where they were originally attached. Do not allow the labels and name plate to become obstructed or defaced.

<Example of MODEL NO. DSM-3W>

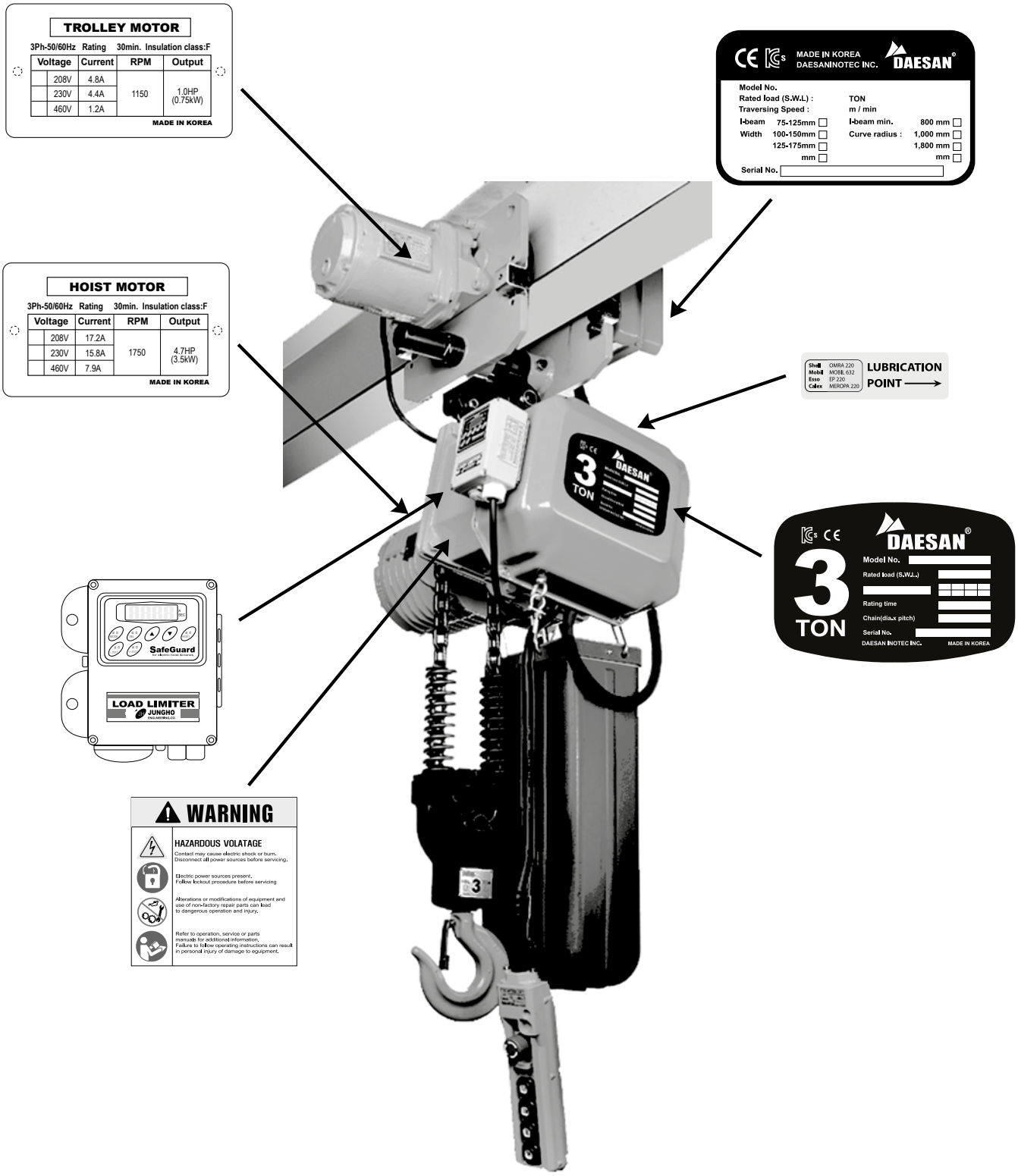

4. Installation

Each complete electric chain hoist is load tested at the factory at 125% of the nameplate-rated capacity.
The service life of the hoist depends on the way it is installed.
Always keep this manual near the hoist. Available to the operator and the person in charge of maintenance.
Make sure that all safety rules are followed.

4.1 Checking of Product

1. Check the product if there is any damage or deformation during the transprotation.
2. Check the specification of the hoist you purchase as listed below.
   a. Model no.
   b. Rated capacity (ton)
   c. Lifting length of load chain (feet or meter)
   d. Power supply
   e. Push button pendant assembly (2 button, 4 button, or 6 button)
   f. Specially ordered optional items
   g. Beam width for trolley installation

Store the hoist in its normal operating position withtout load, away from aggressive atmospheres such as dust or humidity. Make sure that the hoist is always clean and protected from corrosion and is lubricated.

4.2 Installation process

Follow other maintenance procedures outlined in this manual.

1. Handle the hoist by its structure, or by the devices provided for this purpose, or in its original packing.
2. Review the nameplate and warning tags attached to the unit before the installation is started.
3. The hoist should be installed by the technician with the necessary competence.
4. Check that the voltage is in accordance with both the hoist and the voltage at the jobsite (220V, 380V, 440V)
5. Make sure that the hoist attaching structure is rigid
6. Make sure that the safety rules are followed for harness, clearance of work areas, posting of instructions to be followed in the area.

4.2.1 Checking of Electricity

⚠WARNING

Before installing, removing, inspection, or performing any maintenance on the hoist, the main switch shall be de-energized and locked out and tagged out.
Do not use this equipment in hazardous locations.

* The electric chain hoists shall be connected to an earth ground.
* Lock-out and tag-out the main disconnect switch, in the de-energized position, before performing any service on the hoist.
* The customer must supply the power supply cable, the fuses and the main disconnect switch.
* Check that the supply voltage is the same as the nameplate voltage on the hoist.
* Check that the voltage does not vary by more than ±10% from the nominal value.
* Do not use conductors smaller than those listed in the manual, to supply power to the hoist.
* Never bypass limit switches, remove limit switch stops, or otherwise defeat limit switch devices.

4.2.2 Installation of “BOLT with Vent Hole”

DAESAN electric chain hosts are shipped with a “Bolt without Hole” (Solid Bolt) to prevent the possiblity of oil leaking during the trsportation of the product.
When the temperature of the gear assembly goes up with continued operation, the “Bolt with Vent Hole” (Vent Bolt) relieves the pressure in the gear assembly caused by the increase in temperature.

⚠WARNING

Replacement of Solid Bolt with Vent Bolt

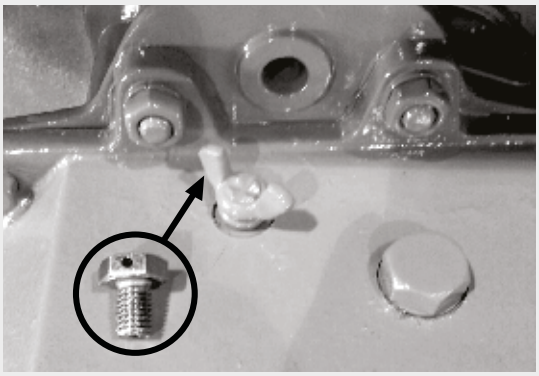

On the hoist, the Solid Bolt is located at the lubrication point. Before the installation of the hoist the customer shall change the bolt from “BEFORE” installation” to “AFTER installation” as shown below.

The Vent Bolt functions as the air ventilation device to relieve pressure created by the increase in temperature from operation of the gearing. It helps prevent damage to the seal packing from high pressure. If NOT changed to “Vent Bolt”, a possible hazardous condition can result due to the high pressure in the gear assembly.

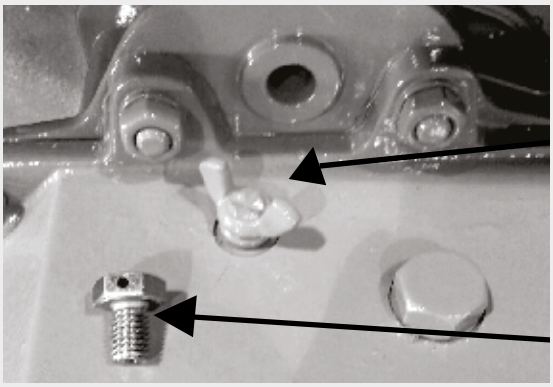

“BEFORE installation”

As shipped, the hoist has a Solid Bolt at the lubrication point to prevent the possibility of oil leaking due to movement in transportation.

“AFTER installation”

With Vent Bolt

4.2.3 Installation of Chain Container to Hoist Body

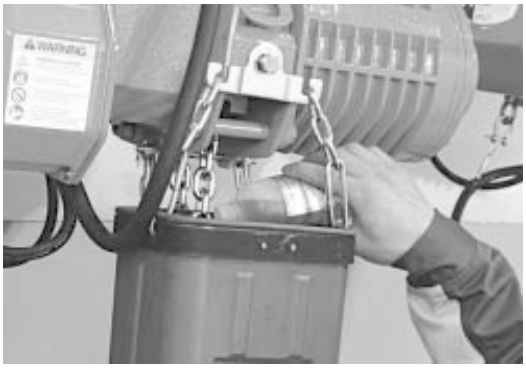

* **How to Install Chain Container**

1) Insert the load chain into the chain container.
2) Place the container support chain on “Chain box support pin” of Chain Container to secure the container.
3) Insert “Chain box support pin” and lock both ends with the “R pin”
4) Line up chains strait so as not to be twisted.
5) Place the remaining container support chain on the Chain box stay bolt

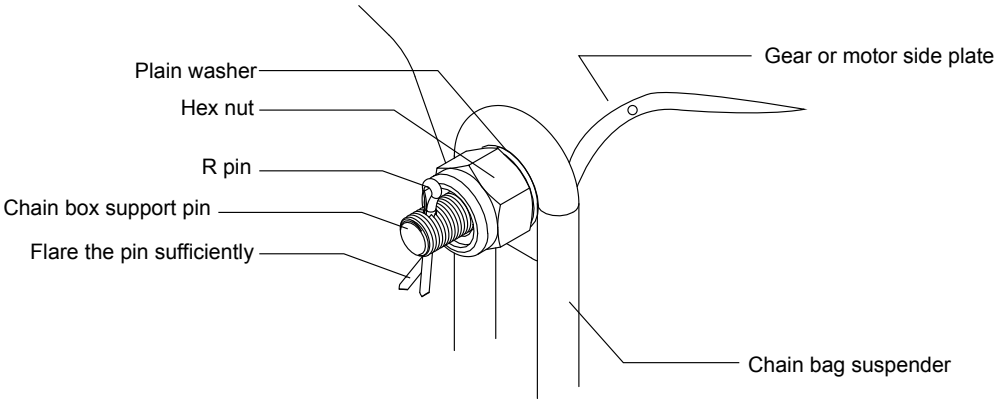

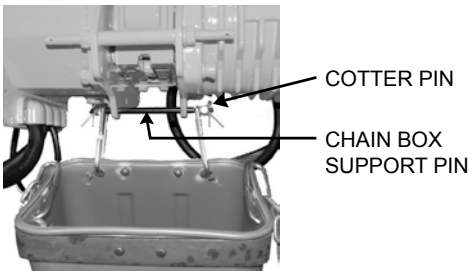

[2-1]

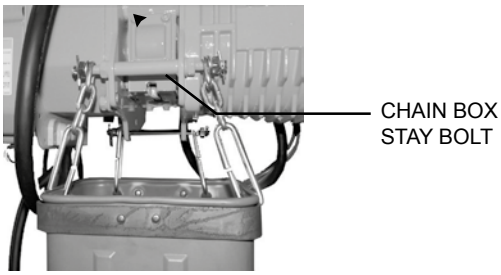

[2-2]

4.2.4 Oil Lubrication on Load Chain and into Chain Container

Please lubricate the load chain, using the plastic oil bottle which is included with the hoist.

NOTICE

Oil Lubrication into Chain Container

After installing the hoist, the oil shall be placed onto the chain and into the chain container (chain bag) before startup.

- If the load chain is used when it's dry, abrasion and noise will result.
- Depending on the oil lubrication, the life of the load chain can vary up to 10 times compared to non-oiled load chain.
- If the load chain is used without oil lubrication before startup, the manufacturer will not be held responsible for possible damage to the load chain.

* Maximum Chain-Lift-Length, According to each Chain Container

Longer lifts affect the chain container size. When exceeding the maximum lift specified for a Chain container, it is strictly proihibited to operate the hoist. For a larger size chain container for longer lifts, please contact the factory or authorized dealer for the Steel Chain Container.

Applied Load Chain : Dia x Pitch			(7.1mm x 21.0mm)		(9.5mm x 28.6mm)	(11.2mm x 34.0mm)						
Capacity			1ton	2ton	3ton	2ton	3ton	5ton	7.5ton	10ton	15ton	20ton
(chain-fall reeving)			(1fall)	(2fall)	(2fall)	(1fall)	(1fall)	(2fall)	(3fall)	(4fall)	(6fall)	(8fall)
Plastic chain container		PCCA	15M Lift	8M Lift	4M Lift	6M Lift	6M Lift	3M Lift	N/A			
		PCCB	40M Lift	20M Lift	12M Lift	18M Lift	18M Lift	9M Lift	6M Lift	N/A		
Steel chain container	Without chain container support	SCC1	N/A		18M Lift	28M Lift	28M Lift	14M Lift	N/A		N/A	
		SCC1-1	50M Lift	25M Lift	N/A	N/A						
	With chain container support	SCC3	72.0M Lift	36.0M Lift	20M Lift	30M Lift	30M Lift	15M Lift	10M Lift	15M Lift x 2		
		SCC4	112M Lift	56M Lift	31M Lift	50M Lift	50M Lift	25M Lift	17M Lift	25M Lift x 2		
		SCC5	154M Lift	77M Lift	50M Lift	80M Lift	80M Lift	40M Lift	26M Lift	40M Lift x 2		
		SCC6	N/A		75.0M Lift	120M Lift	120M Lift	60M Lift	40M Lift	60M Lift x 2		
		SCC10			N/A	N/A					8M Lift x 2	6M Lift x 2
		SCC11									20M Lift x 2	15M Lift x 2

⚠WARNING

Do not attempt to store more quantity of chain in chain container than that specified in the table. When containing more than the maximum specified quantity, it may result in serious damage to hoist and hazardous conditions to the operator and nearby people or goods.
For the hoist with double chain-falls, the chain container should be installed with the unloaded load chain projecting by about 50cm. When the chain container is pushed to the sides by the loads, the load chain may gush out or may not smoothly go through the chain hoist body, posing a danger.

4.2.5 Checking Load Chain after Installation

⚠CAUTION

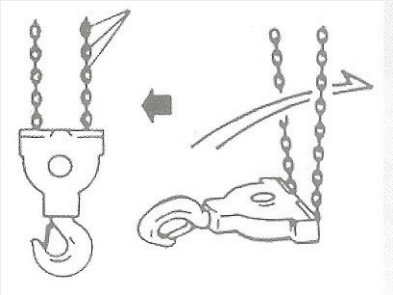

* Before start-up, the operator shall check the load chain. If it is twisted, it shall not be used until the twist is removed and the chain is straight in line.
* For double chain-falls, a capsized load chain shall not be used. When capsized, the operator shall turn over the bottom hook assembly as shown in the figure. If not, it will cause serious damage to the product.
* On load chain, oil lubrication shall be made with the oil bottle which is included with the hoist. When dry chain with no lubrication is used, it will cause shortened life of the load chain and a possible breakage of the load chain during operation, resulting in damage to the product and/or a hazardous condition to the operator and nearby people or goods.

4.2.6 Incorrect Phase Checking (by exchanging one of three black lines)

After installation, the operator shall check UP/DOWN motions by pressing the Push Button Pendant Switch If hoist does not operate in the proper UP/DOWN direction, it indicates incorrect phasing of input power supply lines.

NOTICE

Before operation under load, operator shall check hoist operation with push button control. If the hoist operates in the opposite direction of the push button control, phasing of input power supply line is incorrect.

<u>In this case, reverse TWO of the THREE power supply phase lines as illustrated.</u>

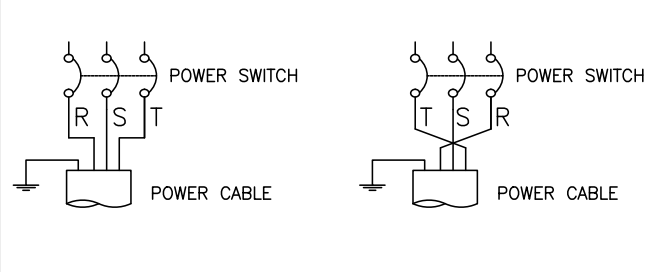

4.3 Installation of the Motorized Trolley Mounted Series

4.3.1 How to Install Trolley on the Runway I-Beam

For Trolley, there are Three types : Motorized trolley, Plain trolley, Geared trolley
First, check the difference between beam flange width and guide roller spacing.

* Parts to Adjust I-Beam Width

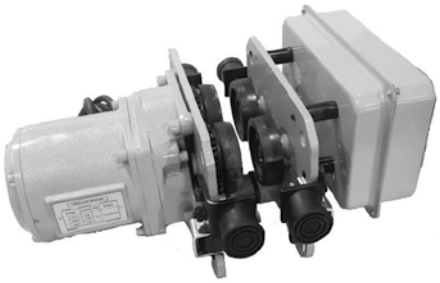

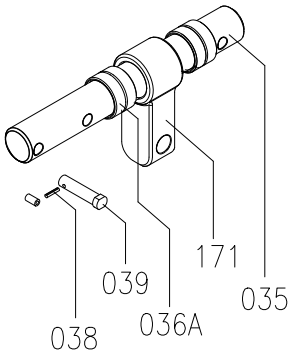

035. Shaft
036A. Adjusting Collar

038. Cotter Pin
039. Stopper Pin
171. Connector

* How to Set Up the I-Beam Width of Motorized Trolley

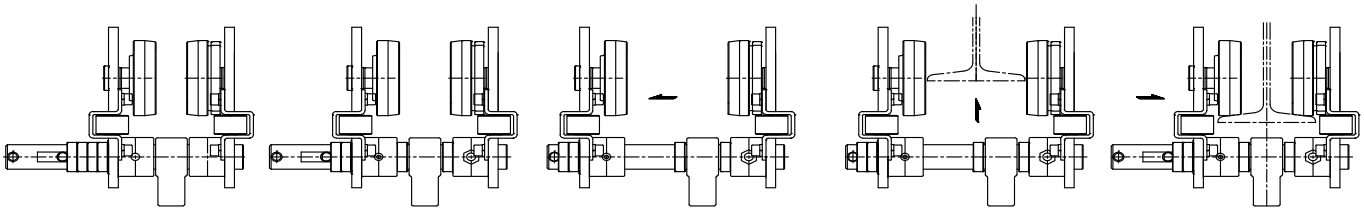

Process ① ② ③ ④ ⑤

Motorized trolley can be used on I-Beams different in width only by inserting adjusting collars (0 pcs to 6pcs.)

① Pull out both ”039. Stopper Pin” and “036A. Adjusting Collar”
② Widen TROLLEY up to the maximum width by pulling out “035. Shaft”
③ In accordance with the following I-Beam width instruction, please insert the applied number of collars and washers at the right end and push the trolley to the direction of arrow mark.
④ Insert TROLLEY on I-Beam.
⑤ Locate “171. Connector” on the center and line up “036A. Adjusting Collar” by setting the same number of collars and washers at both ends.

* Applied Collar Numbers for Each Trolley Capacity on I-Beam

Each collar width per pcs : 12.5mm

I Beam width (mm)	1ton	1.5ton	2ton	2.5ton	3ton	5ton	7.5ton	10ton	15ton	20ton
75mm	0 pcs	N/A	N/A	N/A	N/A	N/A	N/A	N/A	N/A	N/A
100mm	2 pcs	0 pcs	0 pcs	0 pcs	0 pcs	N/A	N/A	N/A	N/A	N/A
125mm	4 pcs	2 pcs	2 pcs	2 pcs	2 pcs	0 pcs	0 pcs	0 pcs	N/A	N/A
150mm	N/A	4 pcs	4 pcs	4 pcs	4 pcs	2 pcs	2 pcs	2 pcs	2 pcs	N/A
175mm	N/A	N/A	N/A	N/A	N/A	4 pcs	4 pcs	4 pcs	4 pcs	0 pcs
190mm	N/A	N/A	N/A	N/A	N/A	N/A	N/A	6 pcs	6 pcs	2 pcs

For beam flange widths other than indicated, distribute collars and washers equally on left side and right side so that the total clearance between beam flange and trolley side guide rollers is no less than 1mm and no more than 5mm. A difference of one washer between left side and right side is permissible.
No difference in quantity of collars between left side and right side is permissible.

⚠WARNING

RIGHT installation: Fit both sides of the connector with the same number of adjusting collars.
WRONG installation: It can result in serious accidents.

RIGHT Installation

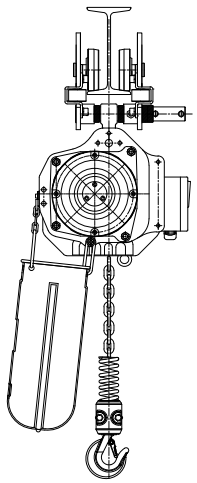

WRONG Installation

(A)

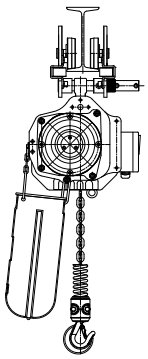

(B)

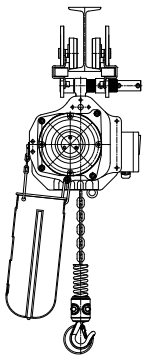

(A) Without collars, the setting of connector become loose and not secure
(B) With one-sided setting of collars, it shall result in the un-balanced trolley installation.

⚠WARNING

(Customer scope for installation)

1. Customer is strongly recommended to install END STOP as this is the customer's responsibility.
   To prevent possible falling of trolley from the runway beam, the customer shall install END STOP as follows.

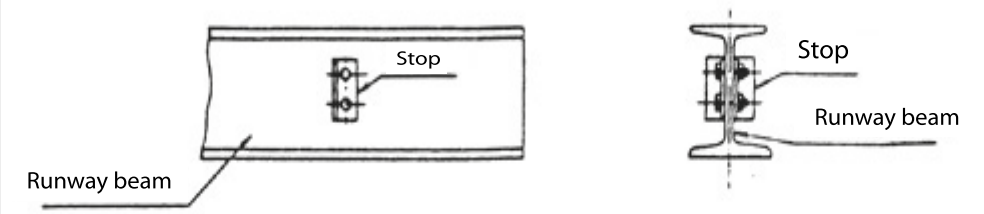

2. For trolley limit switches used as a safety device, they shall be installed in parallel with I-Beam at both ends to detect the runway limit of the end of trolley travel. Please refer to the figure for proper installation.

4.3.2 How to Connect Electric Power Source ("CIS": customer installation scope under customer responsibility)

① In parallel with I-Beam, install the power cable to optimize the trolley movement.
② With each interval of 1.5meter, the cable wheel shall be installed.
③ The minimum allowable curve radius of I-Beam differs with each rated load of hoist.

Please refer to the specification of hoist in manual article no. 1.4 Motor Trolley Mounted Series, single speed.

4.4 Initial Start-Up

Once these checks have been completed, proceed as follows (be ready to press the emergency stop button at all times)

1. Start operating the hoist without a load
2. Check, when not under load, that the movement of the hook corresponds to the direction of the arrows on the pushbutton station.
3. Check the oeration of the hoist limit switch: operate the hoist, without a load, until it reaches the upper and lower hook positions and let the limiter slip briefly.
4. Check the operation of the brake: lift up a nominal load and then lower it.
5. Perform a load test with ±10% of the nominal load and static tests with ±25% of the nominal load on your installation equipped with our hoist.
6. The hoist which you have just purchased should only be used with a maximum load equal to the hoist's rated load. The length of its useful service life depends on the demands placed upon it the average operating time, the number of start-stops and proper maintenance.

4.5 TWIN HOOK CHAIN HOIST (1-5ton)

*Model: DSDH, DSDHM, EDSDH, EDSDHM

Please refer to the page 16 of DSDH model section for product shape and specifications

4.5.1 TWIN HOOK CHAIN HOIST OVERVIEW

The Daesan Twin Hook Chain Hoist is designed for precise and safe parallel operation using a single motor and twin hooks.

This hoist is especially suitable for horizontal lifting and lowering of long objects by utilizing two lifting points

⚠DANGER

Disassembly, assembly, repair, or adjustment of the electric chain hoist must only be performed by qualified maintenance personnel.

Failure to follow these precautions may result in serious or fatal injuries.

⚠CAUTION

* This manual provides specific information on the Twin Hook Electric Chain Hoist. Before use, please read and follow DSA Series Electric Chain Hoist (1T–20T) Operation information along with Twin hook hoist Ensure proper lubrication of the LOAD CHAIN, LOAD SHEAVE, and IDLE SHEAVE.

Failure to observe these precautions may result in serious or fatal injuries.

4.5.2 TWIN HOOK CHAIN HOIST CONFIGURATION AND NAME

* DSDHM & EDSDHM-TYPE (Motorized Trolley)

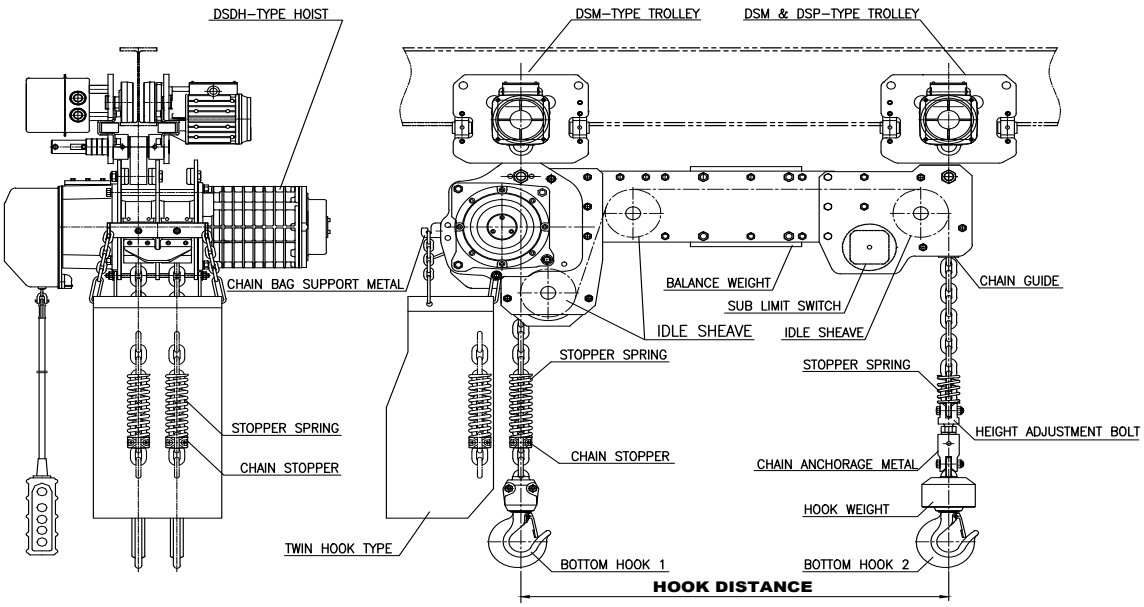

* DSDH & EDSDH-TYPE(Hook Suspension)

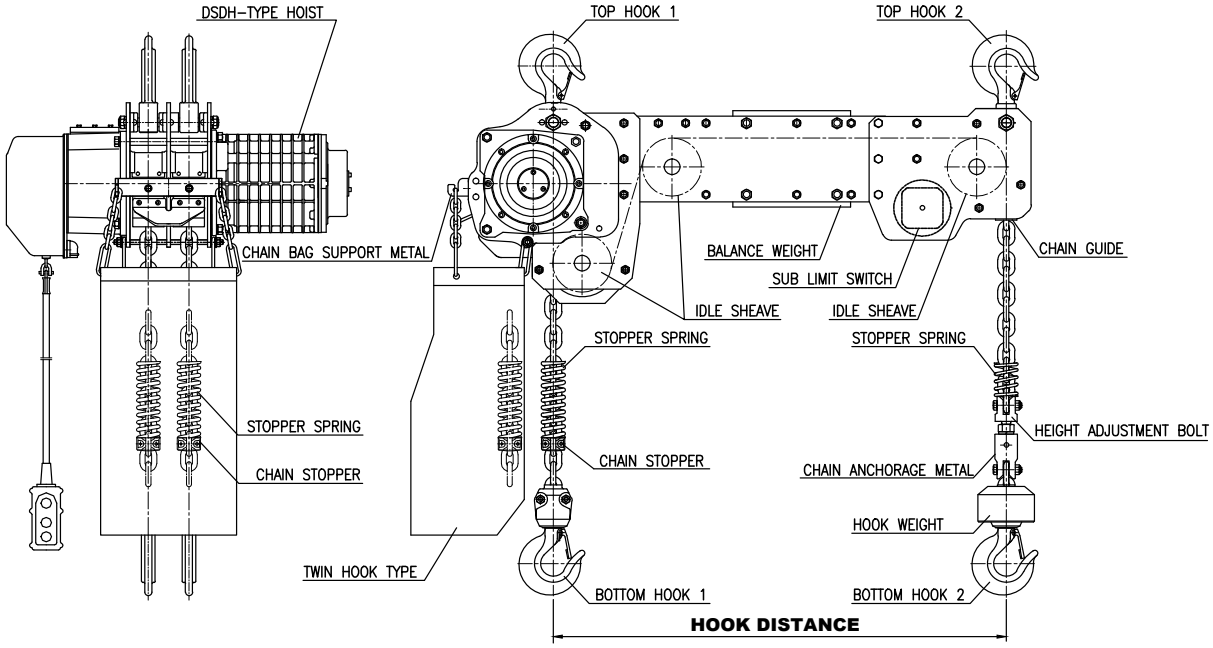

4.5.3 TWIN HOOK CHAIN HOIST SPECIFICATION Attaching Load Chain Accessories

As shown in the drawings below, chain stoppers, stopper springs, and other related components are installed on the load chain.
Please note that the shape, size, and installation method of these parts may vary depending on the hoist capacity and number of chain falls.
Be sure to check the accessory specifications carefully when replacing the chain or any related parts.

* Chain Accessory Specifications

load rating		**1S**	**2W**	**1.5S**	**3W**	**2S**	**2.5S**	**3S**	**5W**
Chain dia x pitch		7 x 2.1		9.5 x 28.6		11.2 x 34			
Chain falls		1+1	2+2	1+1	2+2	1+1			2+2
Load side	Accessory	CHAIN STOPPER							
	Location	N/A	7LINK	N/A	7LINK	N/A			7LINK
No-load side	Accessory	CHAIN STOPPER							
	Location	2LINK							
Load side	Accessory	STOPPER SPRING							
	Quantity	2EA	4EA	2EA	4EA	2EA			4EA
No-load side	Accessory	STOPPER SPRING							
	Quantity	2EA							
others		Please refer to the drawing below for detailed specifications (SINGLE & DOUBLE-CHAIN TYPE)							

* SINGLE-CHAIN TYPE

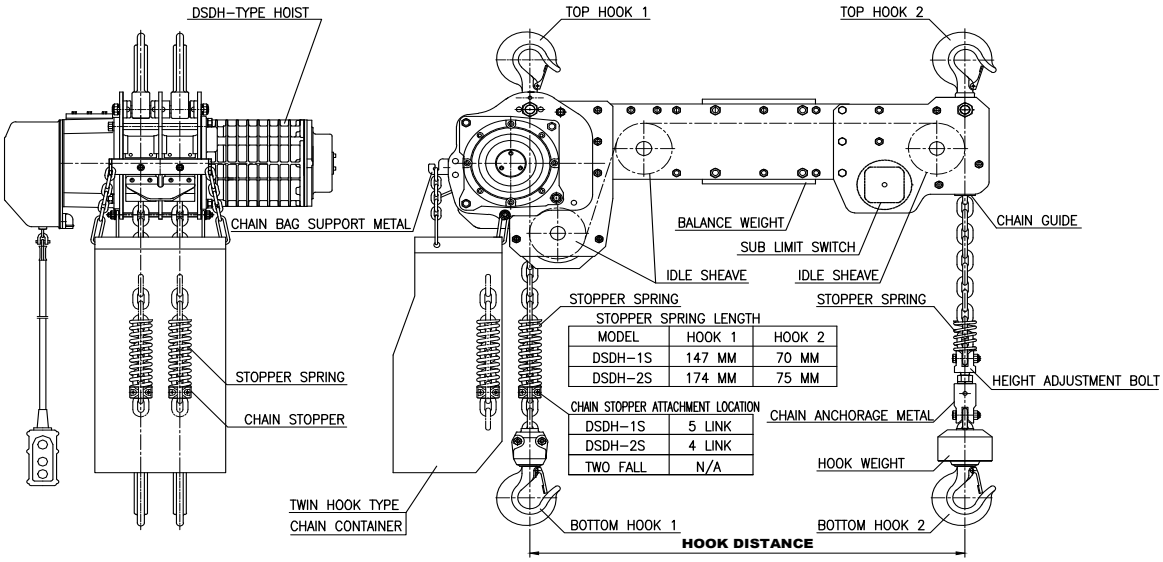

STOPPER SPRING LENGTH

MODEL	HOOK 1	HOOK 2
DSDH-1S	147 MM	70 MM
DSDH-2S	174 MM	75 MM

CHAIN STOPPER ATTACHMENT LOCATION

DSDH-1S	5 LINK
DSDH-2S	4 LINK
TWO FALL	N/A

* DOUBLE-CHAIN TYPE

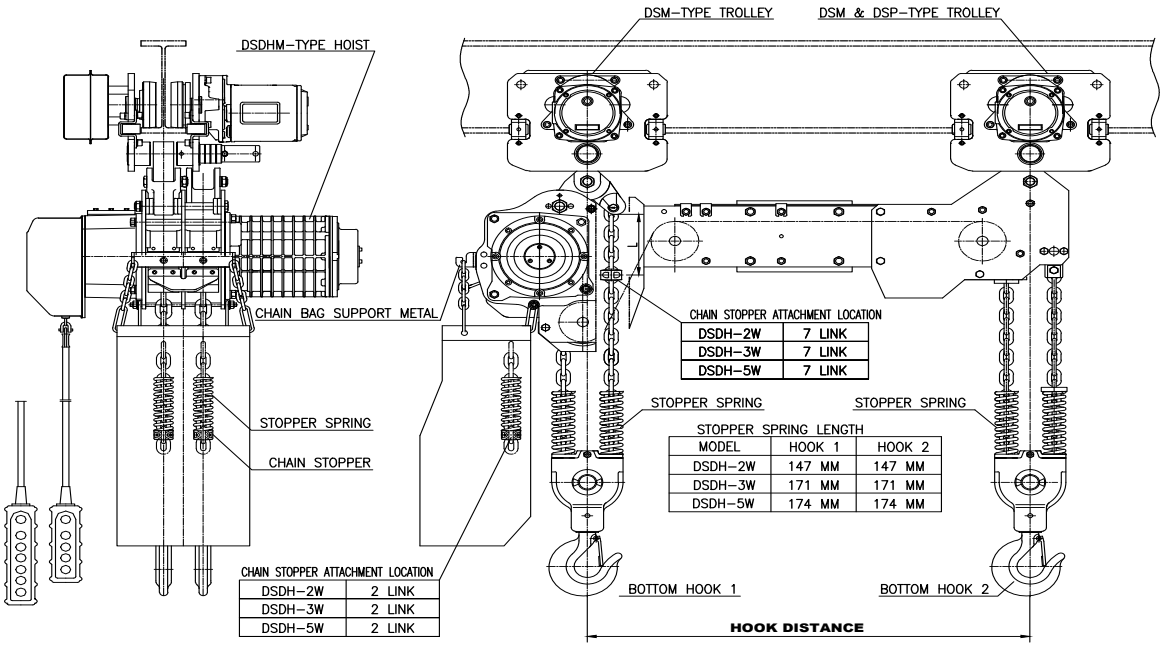

CHAIN STOPPER ATTACHMENT LOCATION

DSDH-2W	7 LINK
DSDH-3W	7 LINK
DSDH-5W	7 LINK

STOPPER SPRING LENGTH

MODEL	HOOK 1	HOOK 2
DSDH-2W	147 MM	147 MM
DSDH-3W	171 MM	171 MM
DSDH-5W	174 MM	174 MM

CHAIN STOPPER ATTACHMENT LOCATION

DSDH-2W	2 LINK
DSDH-3W	2 LINK
DSDH-5W	2 LINK

4.5.4 TWIN HOOK HOIST BEAM WIDTH AND HEIGHT ADJUSTMENT METHOD

- Trolley width adjustment

The DSDH (Twin Hook Electric Chain Hoist) is pre-adjusted to the customer's beam width at the time of shipment or set to the minimum beam width.
If disassembly and reassembly of the trolley is required for frame relocation or maintenance due to installation conditions or space limitations, refer to the Trolley Installation Method section on page 28 and 29.

- BOTTOM HOOK HEIGHT ADJUSTMENT

⚠DANGER

* Do not adjust the height of the lower hook beyond the visible screw thread range in the check hole.

  Failure to follow these instructions may result in a serious accident, potentially causing serious injury or death.

⚠CAUTION

* Tighten the nuts to the specified torque.
* When replacing a split pin, make sure it is properly inserted and bent.

  Failure to follow these precautions may result in a serious accident, possibly leading to serious or fatal injuries.

⚠CAUTION

* Adjust the height of the bottom hook only when there is no load, and after the installation is complete.
* After replacing the load chain, the height of the bottom hook may not be properly adjusted.

  In such cases, please contact your local sales agent or designated DAESAN distributor for cutting and adjusting the bottom hook height.

  Failure to follow these precautions may result in a serious accident, possibly leading to serious or fatal injuries

SINGLE TYPE CHAIN

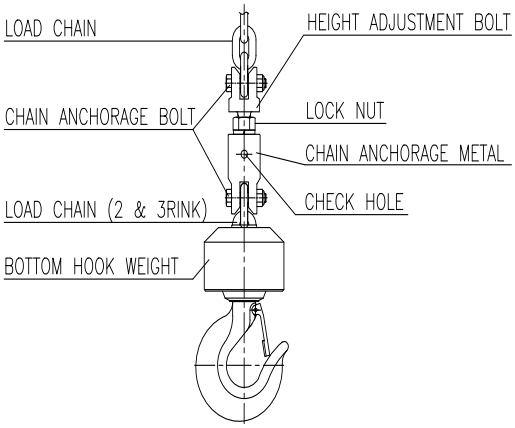

SINGLE TYPE CHAIN

*** Adjustment Procedure**

1) Measure the height difference between Bottom Hook 1 and Bottom Hook 2 when a load is applied.

2) Remove the load and loosen the lock nut..

3) Turn the height adjustment bolt to correct the hook height (Only within the screw thread range visible through the check hole)

4) Fasten the nut to lock the adjusted position..
(Tightening torque: M14 – 104 Nm, based on strength grade 8.8T)

DOUBLE TYPE CHAIN

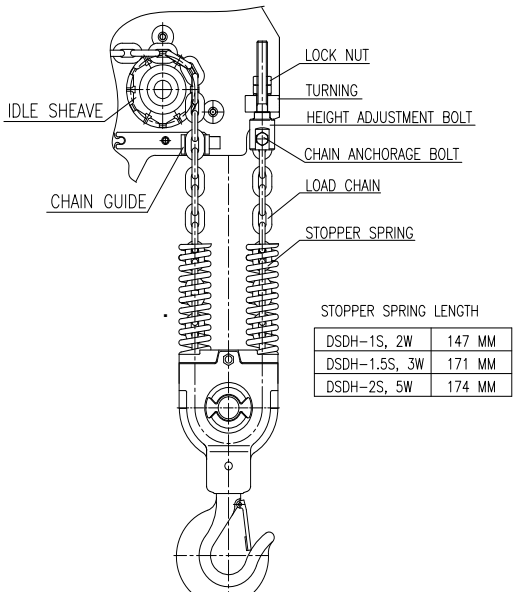

STOPPER SPRING LENGTH

DSDH-1S, 2W	147 MM
DSDH-1.5S, 3W	171 MM
DSDH-2S, 5W	174 MM

DOUBLE CHAIN TYPE

*** Adjustment Procedure**

1) Measure the height difference between Bottom Hook 1 and Bottom Hook 2 when a load is applied.

2) Remove the load and detach the CHAIN ANCHORAGE BOLT.

3) Loosen the lock nut and adjust the height using the HEIGHT ADJUSTMENT BOLT.

4) Fasten the nut to secure the screw position
(Tightening torque: M14 – 104 Nm, based on strength grade 8.8T)

5) Ensure that the load chain is not twisted, and that it is aligned as shown in the left drawing before use.

5. Precautions during Operation

⚠CAUTION

Indicates a potentially hazardous situation, which, if not avoided, MAY result in minor or moderate injury. To avoid such a potentially hazardous situation, THE OPERATOR SHALL

1. Perform a daily inspection according to the instruction manual.
2. Inspect the load chain for any type of deformation or damage and check the load chain lubrication.
3. Visually inspect hooks and hook latches for any type of deformation of throat opening, wear on saddle or load bearing point, and twisting.
4. Report missing or illegible warning labels to the supervisor.
5. Not operate the hoist if any damage or malfunctions exist.
6. Know hand signals used for hoist operation as per instruction manual.
7. Always notify others when a load transport is about to begin.
8. Always make sure that the supporting structures are strong enough to support the weight of the load and hoist.
9. Maintain firm footing or be otherwise secured when operating the hoist.
10. Check brake function by tensioning the hoist prior to each lift operation.
11. Use hook latches. Latches are to retain slings, chains, etc. under slack conditions only.
12. Place slings balanced on the bottom hook. Avoid “Improper” slinging cases shown below.

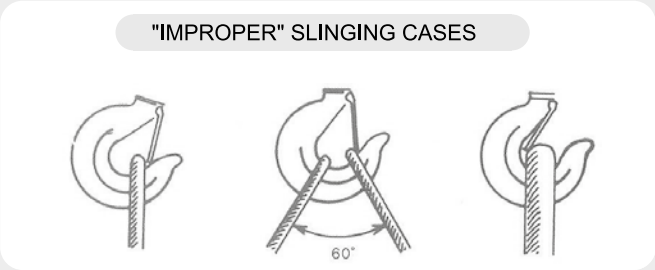

13. Make sure the hook latches are closed and not supporting any parts of the load.
14. Make sure the load is free to move and will clear all obstructions.
15. Avoid swinging the load or hook
16. Make sure hook travel is in the same direction as shown on the controls.
17. Inspect the hoist regularly, replace damaged or worn parts, and keep appropriate records of maintenance.
18. Use only manufacturer’s recommended parts when repairing the unit.
19. Lubricate load chain per hoist manufacturer’s recommendations.
20. NOT use the hoist’s overload limiting clutch to measure load.
21. NOT use limit switches as routine operating stops. They are emergency devices only.
22. NOT allow your attention to be diverted from operating the hoist.

23. NOT allow the hoist to be subjected to sharp contact with other hoists, structures, or objects through misuse.
24. NOT adjust or repair the hoist unless qualified to perform such adjustments or repairs.
25. The hoist should be maintained regularly, following the instructions in this manual.
26. Keep the moving components clean and oiled as indicated in this manual.
27. Make sure that the limit switch stops are in place, and that all limit switches are functioning properly.
28. Before operation, check that the load is correctly fastened and installed on the hook
29. When moving the load, make sure that it is sufficiently raised and distant from the surrounding machines and other objects so as to avoid all obstacles during operation.
30. Make sure that the hoist is vertical to the load before moving it.
31. If manually moving the hoist, push the load.
32. Avoid rocking the load or the hook when using the traveling trolley or crane, by limiting the starting and braking jerks.
33. Use the material under normal working conditions with ambient temperature, atmosphere.
34. Use only for indoor operation of hoist. For outdoor operation, provide adequate protection to ensure a rainproof environment.
35. NOT operate the hoist if any damage or malfunctions exist; and SHALL report any damage or malfunctions to the supervisor.
36. NOT operate the hoist if tagged-out
37. NOT lift, lower, or transport personnel by means of the hoist, hoist trolley, hoist hook, or load.
38. After installation - confirm load chain is well lubricated, not twisted and moves freely into the chain container. This applies to the original installation and anytime the hoist is relocated.

6. Maintenance and Servicing

6.1 Electrical Connection

⚠CAUTION

(Customer responsible scope for installation)

Before removing the control box cover, check that the hoist power supply is disconnected and locked and tagged.

* The customer must supply the power supply cable, the fuses and the main disconnect switch (Refer to the wiring diagram)
* Check that the power supply voltage is correct for the hoist.
* Check that the voltage does not vary by more than ±10% from the nominal value.
* Make sure that the main hoist power disconnect switch is de-energized.
* Do not use conductors smaller than those listed in the manual to supply power to the hoist
* Never bypass limit switches, remove limit switch stops, or otherwise defeat limit switches.

6.2 Chain Stopper in the Chain Container

The chain stopper for slack fall stop is a safety component, not a functional onel. Make sure that the stop is correctly fitted. The chain stopper of non-loaded side must be fixed 3cm (2nd link) from the load chain end as shown in the left figure.

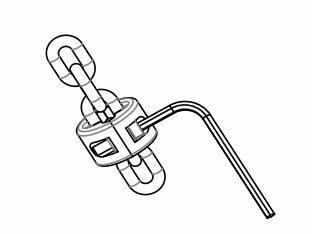

Securely fix using the wrench

At the time of product installation, check chain stopper bolts for tightness. Check chain stopper monthly and tighten socket bolts if required.

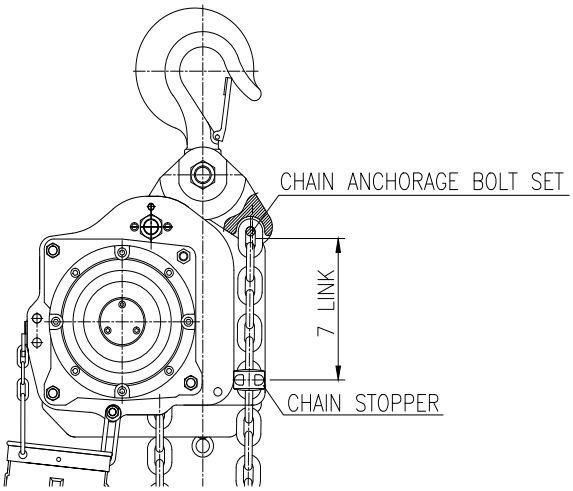

In order for the proper limit switch operation, the upper chain stopper for 2 chain-falls of the load chain (2W, 3W, 5W) should be fixed to 7th link chain from the end of chain anchorage bolt

6.3 Chain Stopper Spring

For safe operation, the Chain Stopper Spring must be replaced when the free length ”L” is short of the dimension in the following table.

■ Standard “L” length

Capacity	Chain fall (reeving)	Standard “L” length	Replacement required
1T	1chain fall	147mm	132mm or less
1.5T	1chain fall	171mm	150mm or less
2T	1chain fall	174mm	160mm or less
	2chain fall	147mm	132mm or less
2.5T	1chain fall	174mm	160mm or less
3T	2 chain fall	171mm	150mm or less
5T	2 chain fall	174mm	160mm or less
7.5T	2 chain fall	174mm	160mm or less
10T	4 chain fall	174mm	160mm or less
15T	6 chain fall	174mm	160mm or less
20T	8 chain fall	174mm	160mm or less

■ Replacement required

6.4 Load Chain

⚠WARNING

Check if the chain is twisted or not.
Never try to use the hoist when the load chains are entangled.
Pull the bottom hook to the normal vertical position before use.
Never use the lifting chain as sling.
Never twist the lifting chain.
Do not bundle the chain into the chain bucket.
Always keep the chain clean and oiled and check that it is in good condition every day.
Only a genuine, manufacturer's chain may be used.

Specification of Load Chain

Load chain : diameter x pitchmm		7.1 x 21.0	9.5 x 28.6	11.2 x 34.0
Class, Grade		DAT, HE G80 RS		
Surface Hardness		520-620 HV10		
Manuf. Test force min.	KN	39.6	71	98.5
Breaking force min.	KN	63.5	113	158
Stress at breaking force	N/mm^2	800	800	800
Breaking elongation min.	%	10	10	10
Working load limit, 1 fall	kg	1000	1800	2500
Weight per meter	kg	1.1	1.96	2.66
Dimension (mm)	d	7.1	9.5	11.2
	p	21.0	28.6	34.0
	W1	8.4	11.2	13.7
	W2	23.6	31.3	37.8

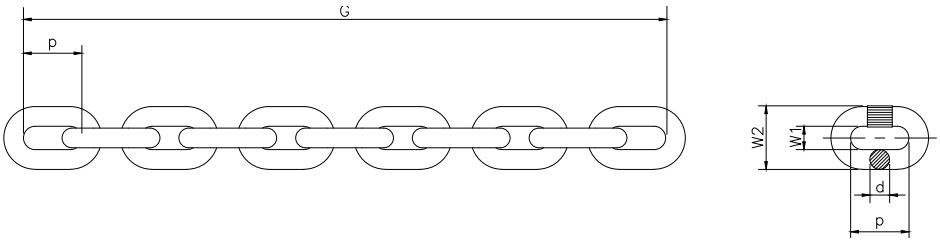

6.5 Measurement of Wear and Replacement of the Load Chain

Dimension of load chain : Dia x Pitch	7.1 x 21.0mm	9.5 X 28.6mm	11.2 x 34.0mm
Minimum link diameter allowed (d) :	6.8	9.1	10.9
Maximum pitch allowed (p) :	21.6	29.4	35.0
Maximum gage length allowed (G) : (11links pitch measurement)	237.5	323.4	385.0

NOTES : For link diameter, when the wear has increased by more than 5% For pitch, when the wear has increased by more than 3%

Check the load chain for deformation or cracks. In this case, the wear on the chain guide and load sheave

should also be checked and they should be replaced if necessary. If a single link is defective in any way whatsoever, the chain must be replaced. If these limits are exceeded, the chain must must replaced immediately. The gage dimension to be checked shall be measured over 11 links from inside end of link to inside end of link (as shown in figure on previous page).

To remove the chain for 1-fall chain:

a. Remove the load from the hook.
b. Disassemble the hook block.
c. Lower the chain into the chain container.
d. Remove the chain container and unscrew and remove the lower chain guide

To remove the chain for 2-fall chain:

a. Raise the hook block to about 50cm from the hoist body.
b. Remove the chain bucket.
c. Disassemble the fixed point of the chain.
d. Let the rest of the chain slide through the load sheave.

Checking Chain Alignment (the welded part outward from the center)

① Before installation, the welded part position should be checked for safe operation. With the welded part of chain links outward from load sheave or hoist center, the load chain should be aligned before installation. If not aligned correctly outward, it can cause a hazardous condition.

② For the safe operation of load chain, make sure that the bottom hook assembly is not upside down or capsized. In this case, the operator shall restore the chain to normal and make sure the welds on the chain links are in alignment. DO NOT use the hoist with twisted chain. For “Abnormal” case, please turn the bottom hook assembly between the chains to align the load chain.

③ For the inspection of idler sheave of bottom hook assembly, turn idler sheave by lifting the load chain up and down as per the figure.

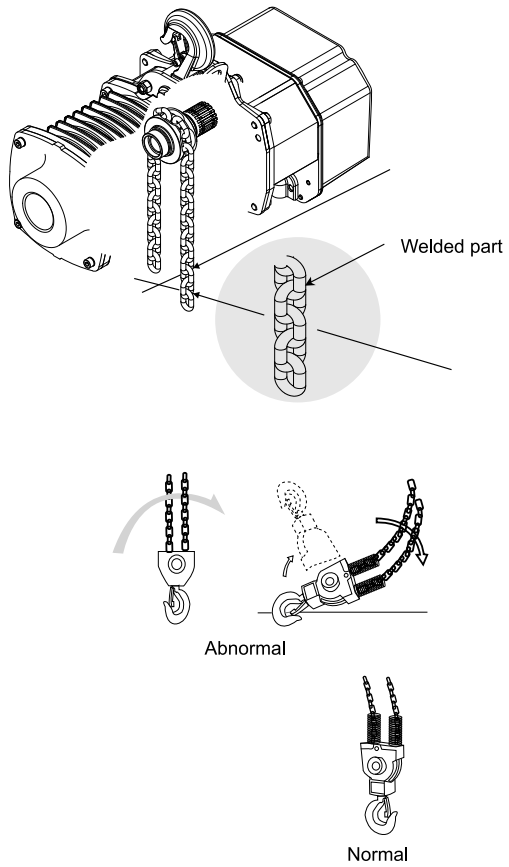

6.6 Hook

Measurement of Wear on the Hook (mm)

Capacity	Standard Hook Dimension					For Maintenance(Replacement required)	
	A	B	E	M	N	*Maximum Throat Opening= Nx105%	Minimum Depth= E x 90%
1t	96	24	31.5	35	23.5	24.7	28.35
1.5ton	144.0	30.0	43.0	53.5	39.5	41.5	38.7
2ton	144.0	30.0	43.0	53.5	39.5	41.5	38.7
2.5ton	168.5	35.0	49.0	60.0	45.0	47.3	44.10
3ton	168.5	35.0	49.0	60.0	45.0	47.3	44.10
5ton	190.0	43.5	55.0	70.0	56.0	58.8	49.50
7.5ton	234.0	55.0	87.0	90.0	52.0	54.6	78.30
10,15,20ton	323.0	80.0	118.0	120.0	85.0	89.3	106.20

For all models, it is used with the same size for both Top Hook and Bottom Hook.

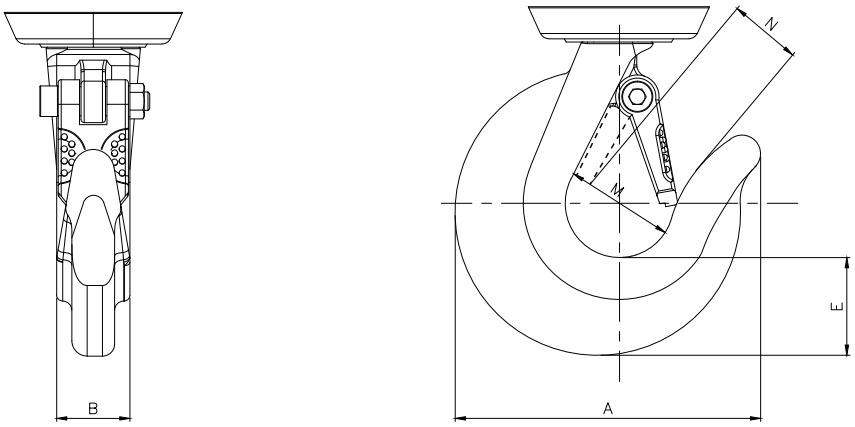

Check hooks for deformation or cracks. Hooks must be replaced if throat opening has increased by more than 5%, or if throat opening has more than 10-degree twist from plane of straight hook.

For the wear on the top hook and the load bottom hook, it shall be checked regularly. Measure the throat opening. If the throat opening exceeds the maximum opening allowed, replace the hook. Damaged safety latches shall be replaced immediately. Measure the section dimension E. If this measurement is less than the minimum allowed, replace the hook.

Chain Anchorage bolt on multiple chain fall (Model : 2W, 3W, 5W, 7.5W)

For multiple chain fall hoists, top & bottom hook assembly is fastened with chain anchorage bolt.

If any deformatikon is detected, it shall be replaced. Otherwise, the load chain and the hook assembly can fall.

S12 Anchorage bolt set

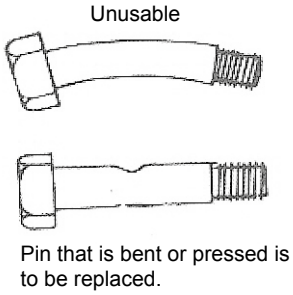

6.7 Load Sheave and Chain Guide

Load Sheave ensures perfect positioning of the chain with 5 or 4 pockets for better distribution of the load. Load chain is to be geometrically lined up in accordance with the chain guide and load sheave.

Chain guide assures proper engagement of the chain on the load sheave and minimize load chain wear. The chain guide also serves as the trip mechanism for the upper and lower hook travel limit switch. When contacted by the hook travel spring, the chain guide will actuate either the UP or DOWN travel limit switch and stop hoisting motion.

6.8 Dual Brake System (electric magnetic)

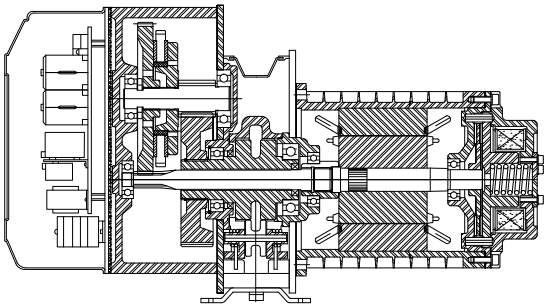

The hoist has both an electrically operated motor brake and a mechanical load brake.

The electro-magnetic brake is

- Equipped with a D.C Solenoid which provides lower electric consumption throughout the process of hoist operation.
- Combined with the mechanical brake to constitute a complete dual brake system

⚠WARNING

Before replacing brake lining, make sure electric power is turned off and load on the hook is removed.

⚠CAUTION

After replacing the brake lining, operate the hoist in the order of without load, with light load and with rated load to check the brake function

6.8.1 Replacement of Brake Linings

Before diassembling motor brake, the electric power supply shall be turned off.
When the braking function is detected as “POOR” or “ABNORMAL”, the motor brake is to be checked.
The thickness of the Brake Disc assembly can be measured as per the picture on the right. According to the following table of “Replacement Thickness of Brake Disc Assembly”, the replacement of disc assembly shall be made when it is worn to the “To be Replaced” figures.

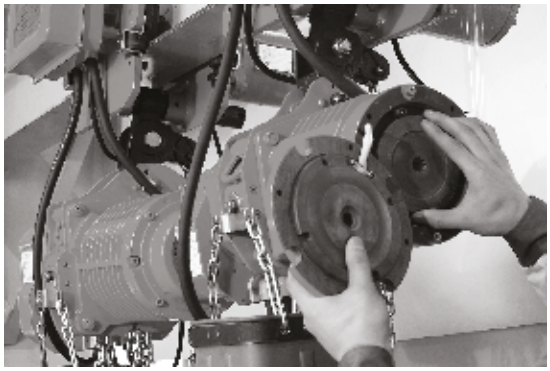

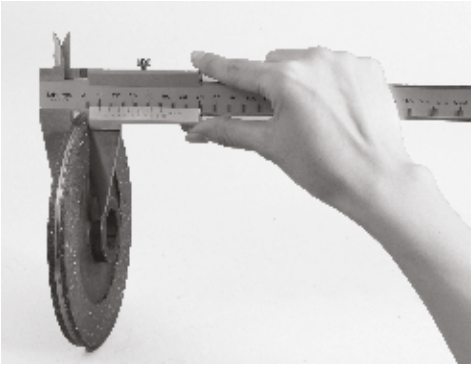

■ Replacement of brake Disc Assembly

Product	Chain Hoist Body		Motor Trolley
	Motor brake	Mechanical brake	Motor brake
Part no.	Brake disc ass’y	Ratchet brake disc ass’y	Brake disc ass’y
Recommended Inspection period	Daily	Annually	Dailly
	Standard thickness → To be Replaced Thickness		
1ton (1chain-fall) 2ton (2chain-falls)	10mm → 9.2mm	14mm → 13.5mm	Ø 114mm - 110mm
2ton(1chain-fall)	10mm → 9.2mm	18mm → 17.5mm	
3ton(2chain-falls)			
5ton(2chain-falls)			
7.5ton(3chain-falls)			
10ton(4chain-falls)			
15ton(6chain-falls)			
20ton(8chain-falls)			

6.9 Motor

Heavy-duty Motor with Overheat Thermal Sensor

High torque and heavy duty hoist motor with insulation class “F”. Frequent operation is efficient with 30min rating

With the built-in thermal sensor, it automatically stops the operation to cool down when the motor internal temperature exceeds 130 °C. AC rectifier provides DC voltage for the motor brake.

Type of motor enclosure : TENV

6.9.1 Motor Rating of Hoist and Trolley

Motor	Capacity, chain fall (reeving)	Motor (kw)(HP)	Rated Current (A)		
			220V	330V	440V
Hoist motor	1ton, 1chain-fall	1.8kw (2.4HP)	9.2A	4.9A	4.2A
	2ton, 2chain-fall				
	2ton, 1chain-fall	3.5kw (4.7HP)	17A	9.1A	7.9A
	3ton, 2chain-fal				
	5ton, 2chain-fall				
	7.5ton, 3chain-fall				
	10ton, 4chain-fall	3.5kw(4.7HP)x2	17Ax2	9.1Ax2	7.9Ax2
	15ton, 6chain-fall				
	20ton, 8chain-fall				
Trolley motor	1ton, 1chain-fall	0.4kw (0.54HP)	3.3A	1.7A	1.5A
	2ton, 2chain-fall				
	2ton, 1chain-fall				
	3ton, 2chain-fall	0.75kw (1.01HP)	5.1A	2.5A	2.2A
	5ton, 2chain-fall				
	7.5ton, 3chain-fall	0.75kw(1.01HP)x2	5.1Ax2	2.5Ax2	2.2Ax2
	10ton, 4chain-fall				
	15ton, 6chain-fall	0.75kw(1.01HP)x2	17Ax2	19Ax2	7.9Ax2
	20ton, 8chain-fall				

6.10 Double Action Over-winding Limiter (built-in Inside)

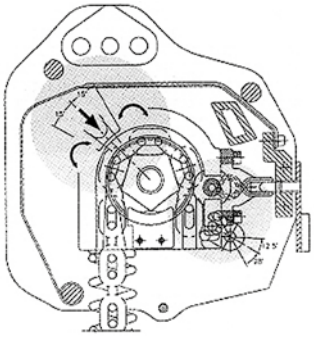

This is the HOIST over-travel device.
The limit switch works to interrupt the control cercuit.

Operation

When both the load chain and chain stopper spring, assembled to chain box, reaches the maximum upper or lower position, it contacts the chain guide.
Rotation automatically actuates limit and de-energizes either the raising or lowering circuit.

6.11 Fuse sets

These components are the safety devices.

Fuse Set ▶

Control Transformer Fuses

Primary and secondary fusing if the control transformer is provided.

6.12 Push Button Pendant Switch – installed with Emergency stop button

Rain-proof, IP64 protection, with 2,4 or 6 buttons, all models are equipped, with Emergency Stop Function.
Easy to operate and designed with 110VAC control voltage. It is compact to enable easy one-handed sure grip control. The push button cable is provided with built-in strain relief to help prevent cable damage.

6.13 Overload Alert Sound Limiter (Protector) Audible “beeping’ Sound(Optional device)

When the hoist is overloaded with more than 110% of the rated load, it signals an audible alert to the operator. When the alert “beeping” sounds, the Up-motion will not operate but the DOWN motion will operate so the overload can be lowered.

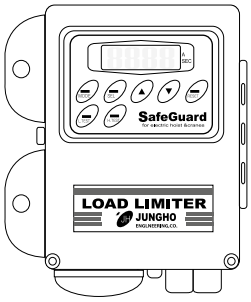

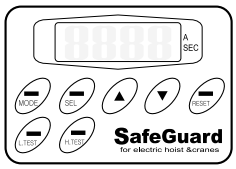

Key legend	Function
LED(display)	Indicates the running current of motor and the overload status.
MOD(mode)	Is used for inputting or memorizing date. Mode key cannot be controlled outside of the box. When using, open the plastic cover and operate inside the box panel.
SEL(selection)	Is for position selection of the required setting value or number.
▲UP **▼DOWN**	Both keys are used to change or check the setting value or number.
RESET	In case of operator’s manual control after the overload or motor or the testing, the RESET key makes the reset of RELAY after TRIP from overloading.
“L” Test **“H” Test**	Both keys are used for testing the operation of high or low speed.

⚠WARNING

Do Not open the outer enclosure. The stored value of the overload limiter shall NOT be changed or modified by anyone other than the manufacturer or an authorized agent. The value inscribed on the overload limiter is the optimal number and value for the hoist, changing this setting can cause equipment damage or personal injury. The manufacturer is not responsible for damage, injury, or death resulting from unauthorized tampering with this device.
The outer enclosure of the overload limiter is sealed by the manufacturer to ensure the alert warning enclosure is not opened.

■ **Description for the inside Panel of Overload alert Limiter** (How to modify the setting figures)

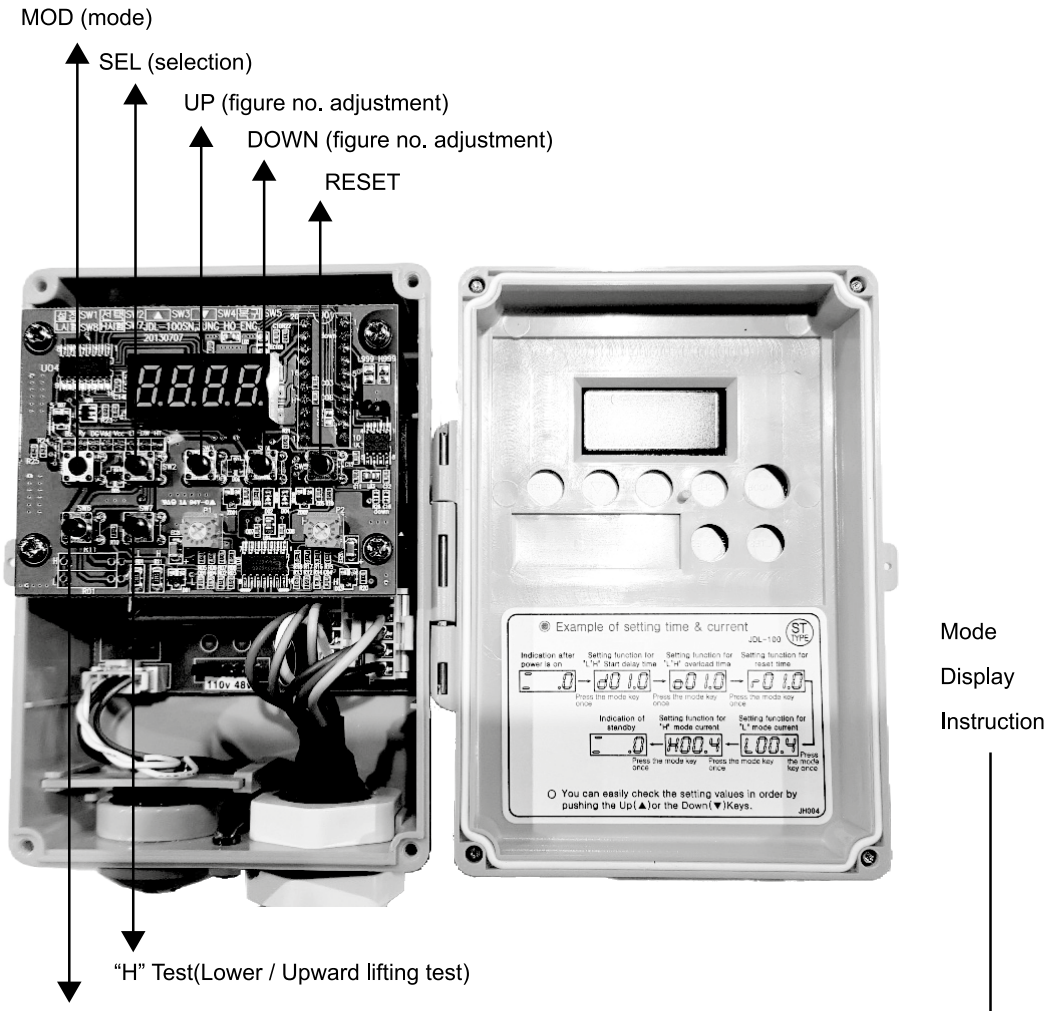

Mode Display Instruction

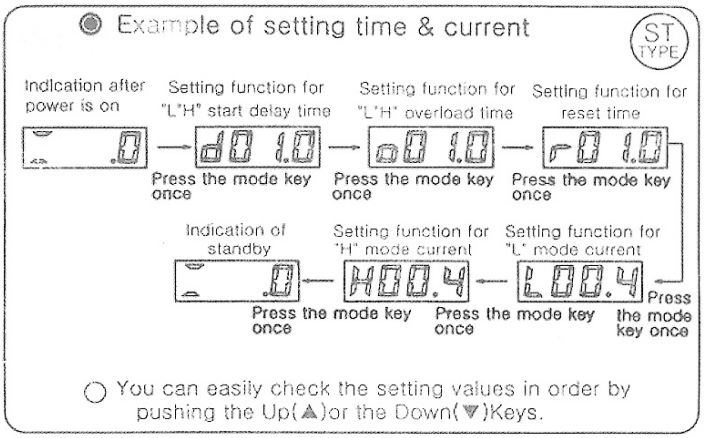

6.13.1 Features

1. Reset time and time delay are stored in the Microcomputer. The overload limiter will allow the hoist to be lowered when the overload limiter is actuated.
2. Detail adjustment is available and the time current can set digitally.
3. The setting is simplified and does not require measuring instruments. Motor current is displayed on the screen during operation.
4. The wiring is simplified by use of an exterior C.T
5. Service is simplified because the main control P.C.B is a “plug-in” type.

■ MOD (mode) DISPLAY :

By pressing the inside panel button, it is possible to modify. From the outside of box, it is not available to modify the figures.

Step	Functions	Unit figures	Display Example	Reference
Step 1. ⇩	Power on			As the basic setting mode, it is displayed at the time of power-on. it is displayed at the time of power-on
Step 2. ⇩	Start delay time:	second		On the start operation, it allows One(1) second to protect from the excessive current flow.
Step 3. ⇩	Overload time:	second		When overloaded, it allows One(1) second to cross check the instant over-current.
Step 4. ⇩	* "L" Test "H" Test	ampere	&	It indicates motor current on "Lower / Downward lifting" operation. It indicates motor current on "Higher / Upward lifting" operation
Step 5. ⇩	Power on			As the basic setting mode, it is displayed at the time of power-on. it is displayed at the time of power-on.

Notes: “L” test is only available for Dual Speed Chain Hoist.
For single Speed Chain Hoist, please set the number of “L” test as the same of “H” test number

NOTICE

For the setting of each function, set the display to H by pressing MOD key. Then press the key one more time.
When a beep sounds, the display will show STANDBY status and the input memorization of the setting is complete.
You can easily check the setting values in order by pushing ▲ **UP** ▼ **DOWN** keys

6.13.2. How to arrange “Mode Setting”

⚠WARNING

- Only authorized person(s) of the person shall service the electric load limiter.
- This device is composed of digitally controlled circuits. When programming changes are made by unauthorized personnel, it can allow the equipment to be overloaded and result in equipment damage, personal injury, or death.
- Before installing this device, be sure to read this instruction manual carefully.

Mode Setting Figures for Overload alert Limiter (60hz single speed)

MODEL NO	CAPACITY CHAINFALL	STANDARD RATING				(according to each MODE setting steps) Recommended setting figures of overload limiter						
		Hoist type	Standard Rating			STEP①	STEP①	STEP③	STEP④		STEP⑤	
			Motor output kw (HP)	Current (ampere)		start Delay time	overload Time	reset Time	“H” (high) Mode current		“L” (low) Mode current	
						(ampere)			(ampere)		(ampere)	
				220V	380V 440V				220V	380V /440V	220V	380V /440V
DSA-1W DSA-2W	1ton, 1chain-fall 1ton, 2chain-fall	Hook Suspension Hoist	1.8kw (2.4HP)	6.7	4.3	1.5sec	1.5sec	1.5sec	7.0	4.5	6.5	3.5
DSA-1.5S DSA-2S DSA-2.5S DSA-3W DSA-5W DSA-7.5W	1.5ton, 1chain-fall 2ton, 1chain-fall 2.5ton, 1chain-fall 3ton, 2chian-fall 5ton, 2chain-fall 7.5ton, -3chain-fall		3.5kw (4.7HP)	13.2	7.9	1.5sec	1.5sec	1.5sec	13.9	8.3	11.5	6.3
DSA-10W DSA-15W DSA-20W	10ton, 4chain-fall 15ton, 6chain-fall 20ton, 8chain-fall		3.5kw (4.7HP)x2	23.8	12.4				25.0	13.5 / 14.0	23.1	12.5 / 14.0
DSM-1S DSM-2W DSM-1.5 DSM-2S	1ton, 1chain-fall 2ton, 2chain-fall 1.5ton, 1chain-fall 2ton, 1chain-fall	Motor Trolley Hoist	0.4kw (0.54HP)	6.7	4.3	1.5sec	1.5sec	1.5sec	7.0	4.5	6.5	3.5
DSM2.5S DSM-3W DSM-5W DSM-7.5W	2.5ton, 1chain-fall 3ton, 2chain-fall 5ton, 2chain-fall 7.5ton, 3chain-fall		0.75kw (1.01HP)x2	13.2	7.9	1.5sec	1.5sec	1.5sec	13.9	8.3	11.5	6.3
DSM-10W DSM-15W DSM-20W	10ton, 4chain-fall 15ton, 6chain-fall 20ton, 8chian-fall			23.8	12.4				25.0	13.0	23.1	12.5

Notes : “L” (low) mode is only used for Dual Speed Chain Hoist. The figures have no effect on Single Speed Chain Hoists. For Single speed Chain Hoist, please set the number of “L” (low) mode the same as “H” (high) mode number

If the supplying voltage at the job site has big difference from hoist rated voltage, the overload limiter may not function properly In that case, overload limiter setting may need to be adjusted.

Mode Setting Figures for Overload alert Limiter (50hz, single speed)

MODEL NO	CAPACITY CHAINFALL	STANDARD RATING				(according to each MODE setting steps) Recommended setting figures of overload limiter						
		Hoist type	Standard Rating			STEP①	STEP①	STEP③	STEP④		STEP⑤	
			Motor output kw (HP)	Current (ampere)		start Delay time	overload Time	reset Time	"H" (high) Mode current		"L" (low) Mode current	
				220V	380V 440V	(ampere)			(ampere)		(ampere)	
									220V	380V /440V	220V	380V /440V
DSA-1W DSA-2W	1ton, 1chain-fall 1ton, 2chain-fall	Hook Suspension Hoist	1.8kw (2.4HP)	6.7	4.3	1.5sec	1.5sec	1.5sec	5.6	3.0	5.6	3.0
DSA-1.5S DSA-2S DSA-2.5S DSA-3W DSA-5W DSA-7.5W	1.5ton, 1chain-fall 2ton, 1chain-fall 2.5ton, 1chain-fall 3ton, 2chian-fall 5ton, 2chain-fall 7.5ton, -3chain-fall		3.5kw (4.7HP)	13.2	7.9	0.7sec	0.7sec	0.7sec	14	6.8	14	6.8
DSA-10W DSA-15W DSA-20W	10ton, 4chain-fall 15ton, 6chain-fall 20ton, 8chain-fall		3.5kw (4.7HP)x2	23.8	12.4				28	13.6	28	13.6
DSM-1S DSM-2W DSM-1.5 DSM-2S	1ton, 1chain-fall 2ton, 2chain-fall 1.5ton, 1chain-fall 2ton, 1chain-fall	Motor Trolley Hoist	0.4kw (0.54HP)	6.7	4.3	1.5sec	1.5sec	1.5sec	5.6	3.0	5.6	3.0
DSM2.5S DSM-3W DSM-5W DSM-7.5W	2.5ton, 1chain-fall 3ton, 2chain-fall 5ton, 2chain-fall 7.5ton, 3chain-fall		0.75kw (1.01HP)x2	13.2	7.9	0.7sec	0.7sec	0.7sec	14	6.8	14	6.8
DSM-10W DSM-15W DSM-20W	10ton, 4chain-fall 15ton, 6chain-fall 20ton, 8chian-fall			23.8	12.4				28	13.6	28	13.6

Notes : "L" (low) mode is only used for Dual Speed Chain Hoist. The figures have no effect on Single Speed Chain Hoists.
For Single speed Chain Hoist, please set the number of "L" (low) mode the same as "H" (high) mode number

If the supplying voltage at the job site has big difference from hoist rated voltage, the overload limiter may not function properly In that case, overload limiter setting may need to be adjusted.

6.13.3 Assembling Figure

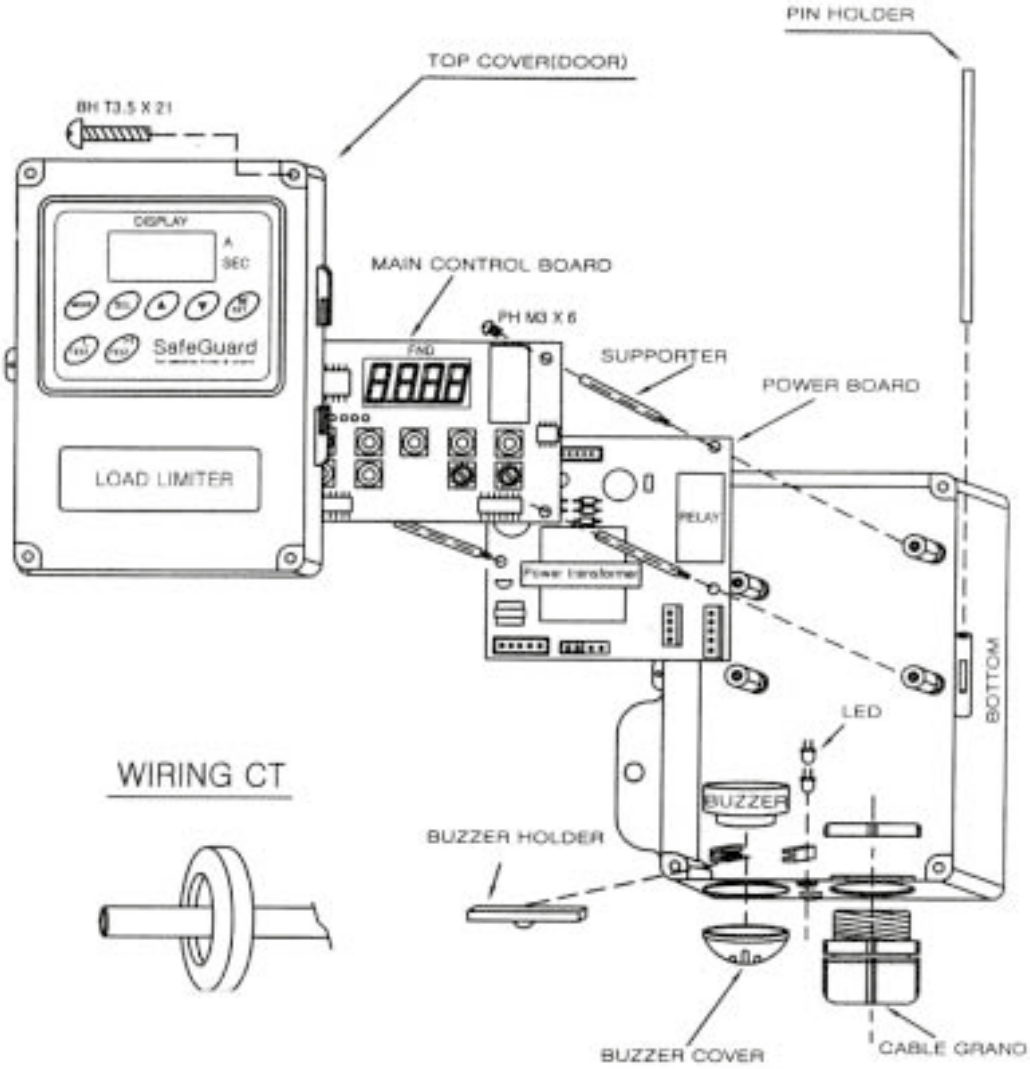

Specification label

CONTROL VOLTAGE	□ AC 48V	□ AC 110V		**⚠WARNING**
	□ AC 220V	□ ACV		When being operated under the circumstances where input power is frequently turned ON/OFF or is turned OFF for long time, the value of data memorized might be initialized. This matter might cause error operation when overloaded. Please keep in mind that the accident caused by error operation endangers person's life. ☞ Be sure to carefully read this manual before use.
F R Q	50/60 Hz	CAPACITY OF CONTACTING POINT	5A/250V AC	
CURRENT	□ 0.8~ 99.9A	□		
TIME	0.1~25.0 SEC	CONSUMING POWER	1.0VA	
SER. NO.	EX -		PAT NO. 0267456. 0240833	

7. Preventive Maintenance

7.1 Recommended Periodic Maintenance and Inspection Table

Check	Interval	Qualification of the customer's personnel
Brake operation	Daily	Operator
Visual inspection of the chain	Daily	Operator
Suspension of the control box by the steel wire	Daily	Operator
Cleanness and lubrication of the chain	Monthly	Operator
Limiter operation	Monthly	Operator
Measuring of the wear on the chain	Every 3 months	Operator
Measuring of the wear on the hooks	Every 3 months	Operator
Tightening of the hook block screws	Every 3 months	Operator
Checking of the locking plate screws	Every 3 months	Operator
Lubrication of the idler sprocket	Annually	Operator
Checking of the screw tightening torques and checking of signs of corrosion	Annually	Qualified mechanic
Adjustment of the limiter and brake	Annually	Qualified mechanic
Lubrication of the gears	Please refer to below lubrication	

7.2 Lubrication

Lubrication point	Possible brands	Quantity & Applied model no.	
Chain	**Chain lubrication fluid**	**As required**	
Gears	SHELL OMALA 220 MOBIL MOBILGEAR 630 ESSO SPARTAN EP EP 220 CALTEX MEROPA 220	1 liter	1ton (chain-fall reeving 1)
		2.5 liter	1.5ton (chain-fall reeving1) 2ton (chain-fall reeving1) 2.5ton (chain-fall reeving1) 3ton (chain-fall reeving 2) 5ton (chain-fall reeving2) 7.5ton (chain-fall reeving3)
		2.5liter x 2	10ton (chain-fall reeving 4) 15ton (chain-fall reeving 6) 20ton(chain-fall reeving 8)

7.3 Recommended Technical Support for Various Spare Parts

Spare part	To be replaced by	Qualification of the personnel
Upper chain guide	Authorized manufacturer personnel	Qualified mechanic
Output shaft	Authorized manufacturer personnel	Qualified mechanic
Ratchet gear assembly	Authorized manufacturer personnel	Qualified mechanic
Gearing (1st/2nd stage)	Authorized manufacturer personnel	Qualified mechanic
Other sealing and O-rings	Authorized manufacturer personnel	Qualified mechanic
Load limiter	Authorized manufacturer personnel	Qualified mechanic
Electric box	Authorized manufacturer personnel	Qualified mechanic
PC-board	Authorized manufacturer personnel	Qualified mechanic
Overload limiter	Authorized manufacturer personnel	Qualified mechanic
Dual brake system	Authorized manufacturer personnel	Qualified mechanic
Chain	Customer	Qualified mechanic
Chain container (chain bag)	Customer	Qualified mechanic
Chain stopper	Customer	Qualified mechanic
Suspension hook	Customer	Qualified mechanic
Hook assembly	Customer	Qualified mechanic
Fuses	Customer	Qualified mechanic

7.4 Troubleshooting

Problem	Cause	Solution
The chain hoist does not work	The emergency stop button is activated	Deactivate it
	Triggered fuse	Replace the fuse
	Temperature control (optional) activated	Allow to cool down
	Contactor terminal screws loose	Tighten them
	Main switch is off	Turn it on
Impossible to lift the load	Overload	Reduce the load
	Limiter worn or incorrectly adjusted	Adjust or replace it
Braking path of more than 4inch (10cm)	Braking lining worn	Adjust the brake and replace the brake components if necessary
The travel direction does not correspond to that indicated on the control box	The power supply is incorrectly connected	Change two phases of the power supply
Abnormal noises while the load is being moved	The chain components are not lubricated	Lubricate the components
	Chain is worn	Replace it
	Load sheave or chain guide is worn	Replace the sheave or chain guide
	Idler sheave is worn	Replace it
	A supply phase is missing	Check the connection of the phases

Once the hoist has been used for the FEM class duration, all of the components must be checked by and authorized agent or by the manufacturer. The hoist should no longer be used. Unless agreement is obtained from the authorized agent or the manufacturer.
For discarding chain hoist. Please remove all greases and oils from the hoist.

8. Inverter (Power Flex 523 Adjustable Frequency AC Drive)

8.1 Operating Hoist (Dual speed)

- Low speed at the first step, high speed at the second step.
- Acceleration time of 3.0 seconds.

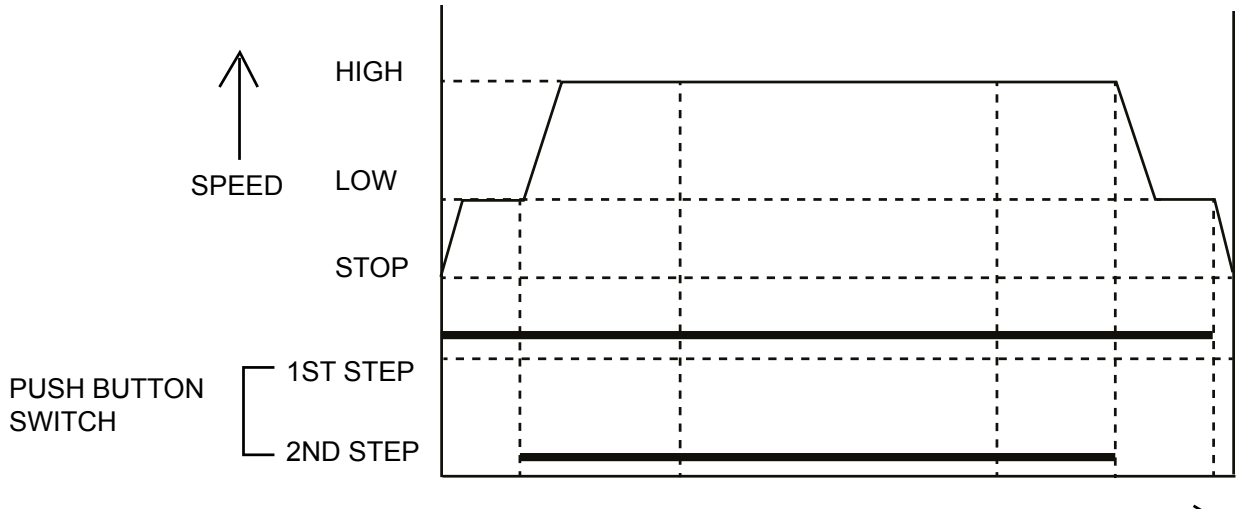

8.2 Motorized Trolley Traversing (Dual Speed)

- Fire step for low speed traversing and second step for high speed traversing.
- Acceleration time of 1.0 seconds and deceleration time of 1.0 seconds based on 1ton.

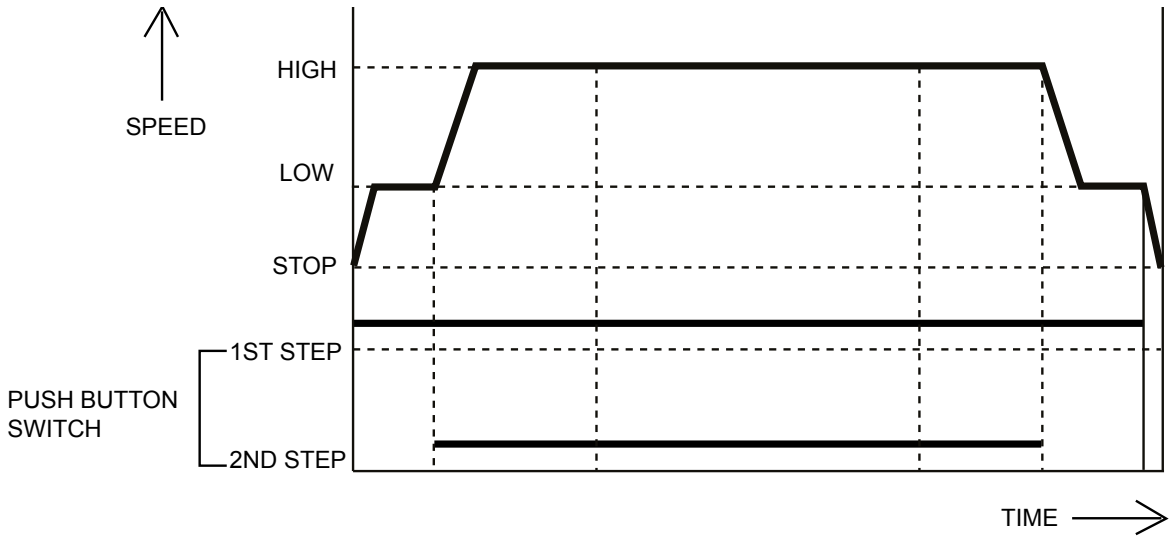

8.3 Push Button Control for Inverter Hoist

■ Reset Button (Emergency Stop Button)
■ To restore the tripped inverter, press this button

■ Hoist Up

- First Step: Slow Speed
- Second Step: Fast Speed

■ Hoist Down

- First Step: Slow Speed
- Second Step: Fast Speed

■ Reset Button (Emergency Stop Button)
■ To restore the tripped inverter, press this button

■ Hoist Up

- First Step: Slow Speed
- Second Step: Fast Speed

■ Hoist Down

- First Step: Slow Speed
- Second Step: Fast Speed

■ Trolley Forward / Reverse

- First Step: Slow Speed
- Second Step: Fast Speed

8.4 Trial Operation

⚠DANGER

DISCONNECT POWER AND LOCKOUT DISCONNECTING MEANS BEFORE

PERFORMING SERVICE TO ELECTRICAL PARTS OF THIS EQUIPMENT.

The inverter drive contains high voltage capacitors that take time to discharge after removal of power supply. Wait for 3 minutes for capacitors to discharge to safe voltage levels before proceeding with any check-up electrical parts of this equipment after shutting down the power.

Failure to read and comply with any of the limitations noted herein will result in serious bodily injury or death and/or property damage.

⚠WARNING

- Check that all wiring has been completed before performing trial operation.
- Don’t change wiring of push button switch.
- To change the acceleration or deceleration time, refer to inverter manual.
- Failure to comply with any of the limitations noted herein can result in serious bodily injury or death and/or property damage.

8.5 Inverter Parameter Settings

2-STEP SPEED INVERTER SETTINGS

CAPACITY	HOIST HZ SETTING	HOIST ACCEL SETTING	HOIST DECEL SETTING
	SET. A410/A411 – LIFTING (up/down)	SET P041	SET P042
1TON	16Hz / 47Hz	3.0 SEC	0.2 SEC
2TON	16Hz / 48Hz	3.0 SEC	0.2 SEC
3TON	18Hz / 54Hz	3.0 SEC	0.2 SEC
5TON	25Hz / 60Hz	3.0 SEC	0.2 SEC
7.5TON	25Hz / 60Hz	3.0 SEC	0.2 SEC
10TON	25Hz / 60Hz	3.0 SEC	0.2 SEC
15TON	25Hz / 60Hz	3.0 SEC	0.2 SEC
20TON	25Hz / 60Hz	3.0 SEC	0.2 SEC

CAPACITY	TROLLEY HZ SETTING	TROLLEY ACCEL SETTING	TROLLEY DECEL SETTING
	SET. A410/A411 - TRAVERSING (east/west)	SET P041	SET P042
1TON	21Hz / 62Hz	1.0 SEC	1.0 SEC
2TON	21Hz / 62Hz	1.0 SEC	1.0 SEC
3TON	23Hz / 68Hz	2.0 SEC	1.0 SEC
5TON	23Hz / 68Hz	2.0 SEC	1.0 SEC
7.5TON	23Hz / 68Hz	2.0 SEC	1.0 SEC
10TON	23Hz / 68Hz	2.0 SEC	1.0 SEC
15TON	23Hz / 68Hz	2.0 SEC	1.0 SEC
20TON	23Hz / 68Hz	2.0 SEC	1.0 SEC

* Please note that the parameter setting is subject to change without prior notice by the manufacturer.

⚠WARNING

- **Do not change any parameter value not indicated in this manual**
- **Do not set a value that exceeds a parameter range given in inverter manual**
- **Make sure to perform trial operation after changing a parameter value. If there is anything wrong, stop the operation immediately and check the values and correct them.**

NOTICE

- To change the parameter value, refer to the inverter manual
  Before making any changes in the inverter, clear understanding of the inverter manual is required.

8.6 Inverter Setting and Control

Factory-default parameter values allow the drive to be controlled from the integgral keypad.
No programming is required to start, stop, chage direction or control speed directly from the integral keypad.

8.6.1 Display and Control Keys

PowerFlex 523

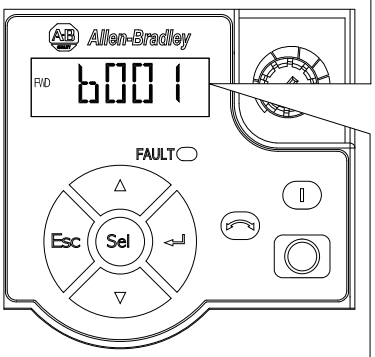

PowerFlex 525

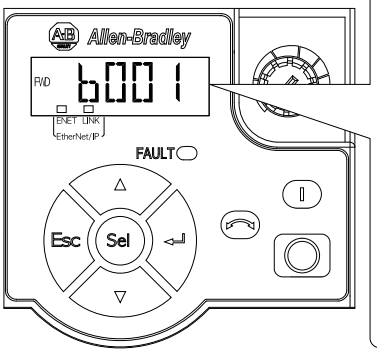

Menu	Parameter Group and Description
b	**Basic Display** Commonly viewed drive operating conditions.
P	**Basic Program** Commonly used programmable functions.
t	**Terminal Blocks** Programmable terminal functions.
C	**Communications** Programmable communication functions.
L	**Logic (PowerFlex 525 only)** Programmable logic functions.
d	**Advanced Display** Advanced drive operating conditions.
A	**Advanced Program** Remaining programmable functions.
N	**Network** Network functions that are shown only when a comm card is used.
M	**Modified** Functions from the other groups with values changed from default.
f	**Fault and Diagnostic** Consists of list of codes for specific fault conditions.
G	**AppView and CustomView** Functions from the other groups organized for specific applications.

Control and Navigation Keys

Display	Display State	Description
ENET (PowerFlex 525 only)	Off	Adapter is not connected to the network.
	Steady	Adapter is connected to the network and drive is controlled through Ethernet.
	Flashing	Adapter is connected to the network but drive is not controlled through Ethernet.
LINK (PowerFlex 525 only)	Off	Adapter is not connected to the network.
	Steady	Adapter is connected to the network but not transmitting data.
	Flashing	Adapter is connected to the network and transmitting data.

LED	LED State	Description
FAULT	Flashing Red	Indicates drive is faulted.

Key	Name	Description
△ ▽	Up Arrow Down Arrow	Scroll through user-selectable display parameters or groups. Increment values.
Esc	Escape	Back one step in programming menu. Cancel a change to a parameter value and exit Program Mode.
Sel	Select	Advance one step in programming menu. Select a digit when viewing parameter value.
⏎	Enter	Advance one step in programming menu. Save a change to a parameter value.

8.6.2 Viewing and Editing Parameters

Key	Name	Description
	Reverse	Used to reverse direction of the drive. Default is active. Controlled by parameters P046, P048 and P050 [Start Source x] and A544 [Reverse Disable].
	Start	Used to start the drive. Default is active. Controlled by parameters P046, P048 and P050 [Start Source x].
	Stop	Used to stop the drive or clear a fault. This key is always active. Controlled by parameter P045 [Stop Mode].
	Potentiometer	Used to control speed of drive. Default is active. Controlled by parameters P047, P049 and P051 [Speed Referencex].

The following is an example of basic integral keypad and display functions. This example provides basic navigation instructions and illustrates how to program a parameter.

Step	Key(s)	Example Display
1. When power is applied, the last user-selected Basic Display Group parameter number is briefly displayed with flashing characters. The display then defaults to that parameter's current value. (Example shows the value of b001 [Output Freq] with the drive stopped.)		FWD 0.00 HERTZ
2. Press Esc to display the Basic Display Group parameter number shown on power-up. The parameter number will flash.	Esc	FWD b001
3. Press Esc to enter the parameter group list. The parameter group letter will flash.	Esc	FWD b001
4. Press the Up Arrow or Down Arrow to scroll through the group list (b, P, t, C, L, d, A, f and Gx).	△ or ▽	FWD P031
5. Press Enter or Sel to enter a group. The right digit of the last viewed parameter in that group will flash.	⏎ or Sel	FWD P031
6. Press the Up Arrow or Down Arrow to scroll through the parameter list.	△ or ▽	FWD P031
7. Press Enter to view the value of the parameter. Or Press Esc to return to the parameter list.	⏎	FWD 230 VOLTS
8. Press Enter or Sel to enter Program Mode and edit the value. The right digit will flash and the word Program on the LCD display will light up.	⏎ or Sel	FWD 230 VOLTS PROGRAM
9. Press the Up Arrow or Down Arrow to change the parameter value.	△ or ▽	FWD 229 VOLTS PROGRAM

Step	Key(s)	Example Display
10. If desired, press Sel to move from digit to digit or bit to bit. The digit or bit that you can change will flash.	Sel	F/D 229 VOLTS PROGRM
11. Press Esc to cancel a change and exit Program Mode. Or Press Enter to save a change and exit Program Mode. The digit will stop flashing and the word Program on the LCD display will turn off.	Esc or ↵	F/D 230 VOLTS or F/D 229 VOLTS
12. Press Esc to return to the parameter list. Continue to press Esc to back out of the programming menu. If pressing Esc does not change the display, then b001 [Output Freq] is displayed. Press Enter or Sel to enter the group list again.	Esc	F/D P031

Note that the last user-selected Display parameter is saved when power is removed and is displayed by default when power is re-applied.

For more detail inverter operation, refer to the inverter manual. (Power Flex 523 Adjustable Frequency AC Drive)

8.7 Trouble Shooting

⚠DANGER

DISCONNECT POWER AND LOCK OUT DISCONNECTING MEANS BEFORE PERFORMING SERVICE TO ELECTRICAL PARTS OF THIS EQUIPMENT.

Only a qualified electrician should perform service to electrical parts of this equipment.

■ **For trouble shooting of the inverter unit, refer to the inverter manual and respond accordingly.**

Example of typical problem

1. Motor doesn't work.
2. Motor rotates backward.
3. Trolley travels at a speed excessively different from the rated speed.
4. Acceleration or deceleration is not smooth.
5. Excessive current runs to the motor.

8.8 Prevent Leakage Current & Noise Effect

8.8.1 Prevent Leakage Current problem

⚠WARNING

- **Leakage current generated through the inverter's input/output lilne or motor electrostatic capacitance may badly affect other equipment.**
- **Since the amount of leakage current depends on carrier frequency (number of switching pulses per second) or the length of the input / output line, take the following preventative measurers.**

* **Solution => Provide an inductive filter or line reactor.**

8.8.2 Prevent Noise Effect Problem

⚠WARNING

- **Noise generated through the power supply line of the inverter's main or control circuit may badly affect other electronics, in particular, measuring instruments and radios, such as those listed below ;**

* **Position Detector, Pressure, Sensor, Proximity Switch, AM radio, Telephone.**

* Solution

- Provide a separate power supply for the inverter and the connected equipment.
- Keep wiring of different types of circutis apart from each other.
- Use shielded wires for weak current and signal circuits, twisted pair wires and for the power supply of weak current singals.
- Provide a noise filter at the incoming power supply circuit of the inverter.

8.9 Maintenance and Inspection

■ Operator shall perform a daily inspection according to this manual including :

1. Does hoist operate according to the push button control?
2. Is there any noise or vibration while operating? Is there any brake slip?
3. Does the limit switch properly operate?
4. Are all warning labels in place and in readable condition?

■ If any kind of problem is detected, stop the operation immediately and report it to the person in charge.

⚠DANGER

HAZARDOUS VOLTAGES ARE PRESENT IN THE CONTROL BOX, OTHER ELECTRICAL COMPONENTS, AND CONNECTIONS BETWEEN THESE COMPONENTS.

Before performing ANY mechanical or electrical maintenance on the equipment, de-energize (disconnect) the main switch supplying power to the equipment : and lock and tag the main switch in the de-energized position. Refer to ANSI Z244.1, Personnel Protection – Lockout/Tagout of Energy Sources. Before checking power supply or electric control parts for hoist, wait 3 minutes before proceeding with any check-ups after shutting down the power.

Do not operate the equipment without control enclosure cover or covers in place.

Only trained and competent personnel should inspect and repair this equipment.

■ Before turning on the power, make sure that the product has been properly wired without any shorted connections or loose screws.

■ Disconnect the inverter unit before performing the insulation resistance or withstand voltage test.

9. Lug Mount Plain Trolley Kit (Option)

9.1 How to Install Lug Mount Plain Trolley on the Runway I-Beam

First, check the difference between beam flange width and guide roller spacing.

■ Parts to adjust I-Beam Width

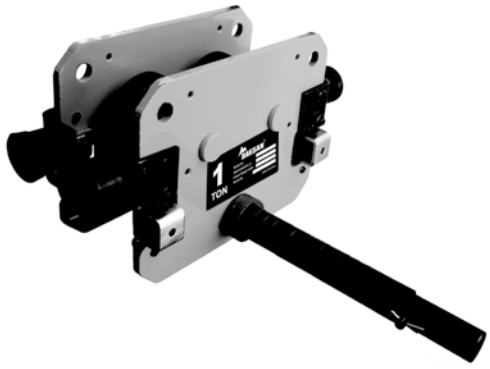

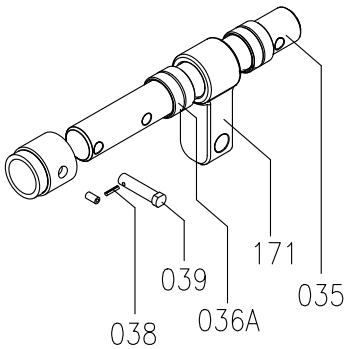

035. Shaft
036A. Adjusting Collar

038. Cotter Pin
039. Stopper Pin
171. Connector

■ How to set up the I-Beam Width of Lug Mount Plain Trolley

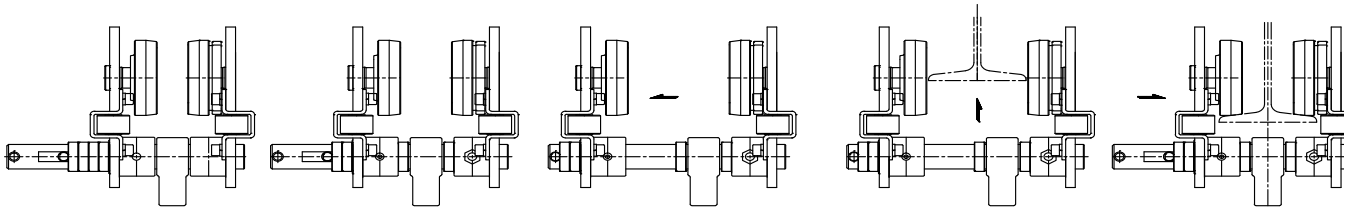

Process ① ② ③ ④ ⑤

Lug Mount Plain Trolley can be used on I-Beams different in width only by inserting adjusting collars (0 pcs to 6 pcs)

① Pull out both “039. Stopper Pin” and “036A, Adjusting Collar”
② Widen TROLLEY up to the maximum width by pulling out “035. shaft”
③ In accordance with the following I-Beam width instruction, please insert the applied number of collars at the right end and push the trolley to the direction of arrow mark.
④ Insert TROLLEY on I-Beam
⑤ Locate “171. Connector” on the center and line up “036A, Adjusting Collar” by setting the same number of collars at both ends.

10.Parts Illustrations

10.1 Exploded View of Chain hoist Parts

(DSA-1S, DSA-1.5S, DSA-2S, DSA-2.5S, DSA-2W, DSA-3S, DSA-3W, DSA-5W & VFD controls)

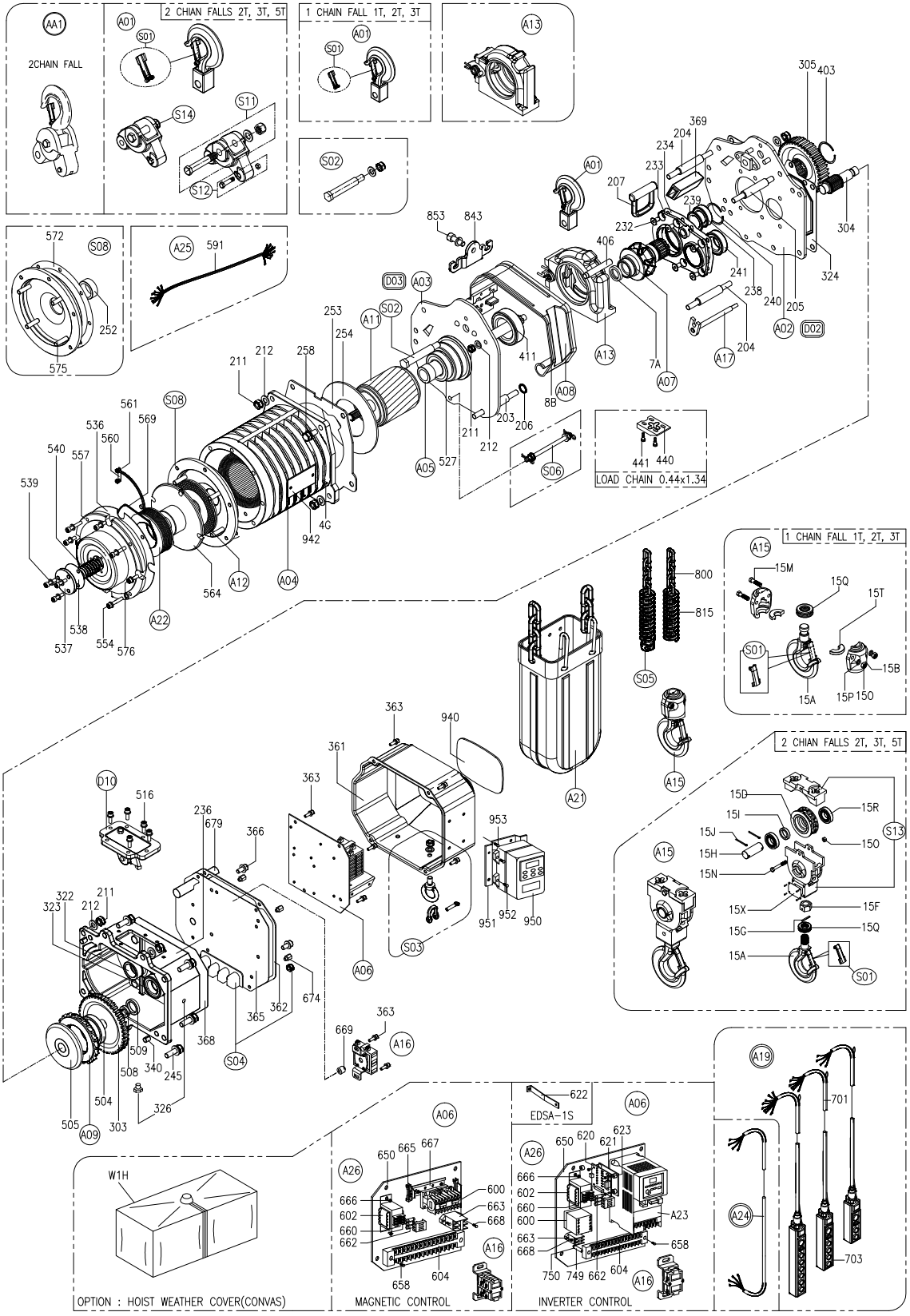

10.2 Exploded View of Motor Trolley Parts

(DSM-1S, DSM-1.5S, DSM-2S, DSM-2W & VFD controls)

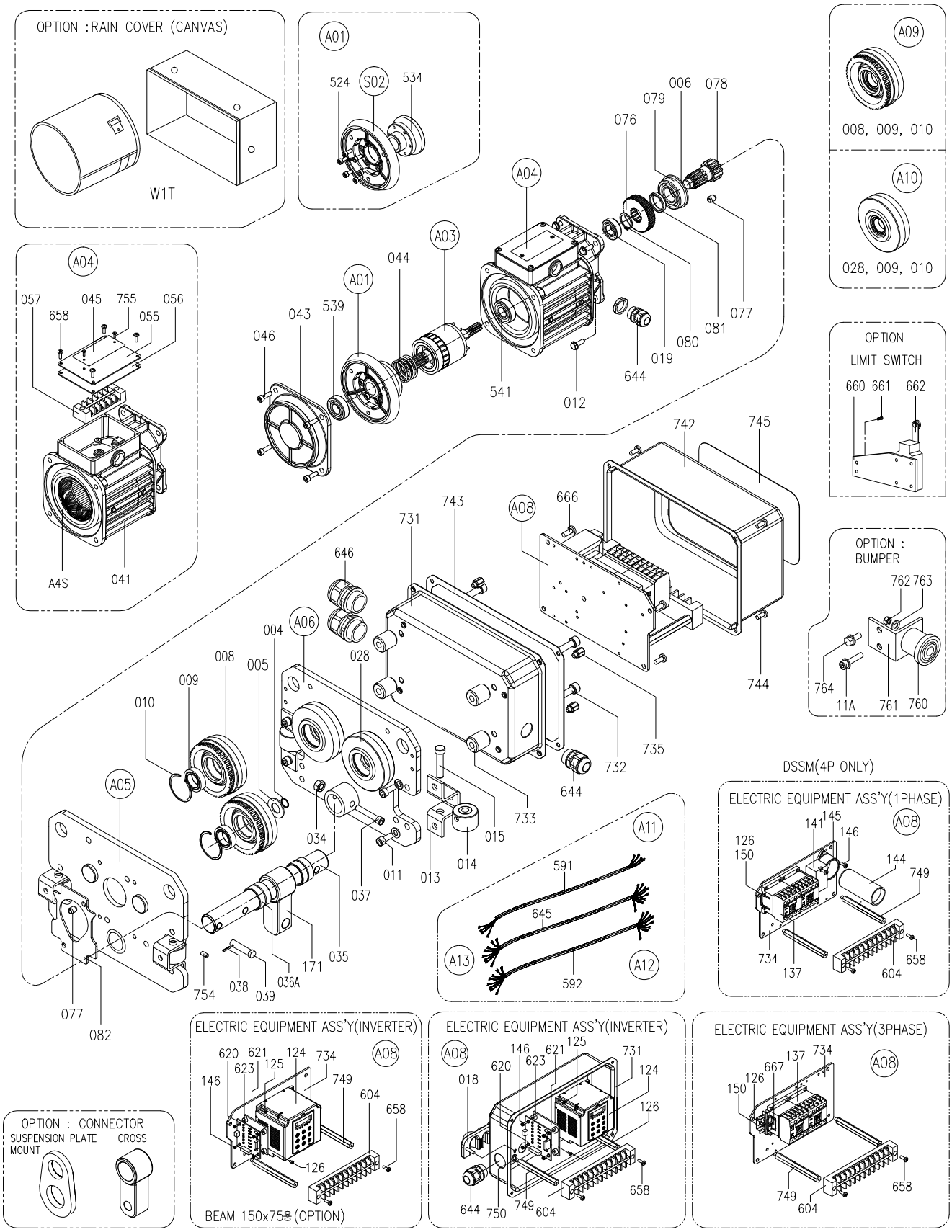

(DSM-2.5S, DSM-3S, DSM-3W, DSM-5W & VFD controls)

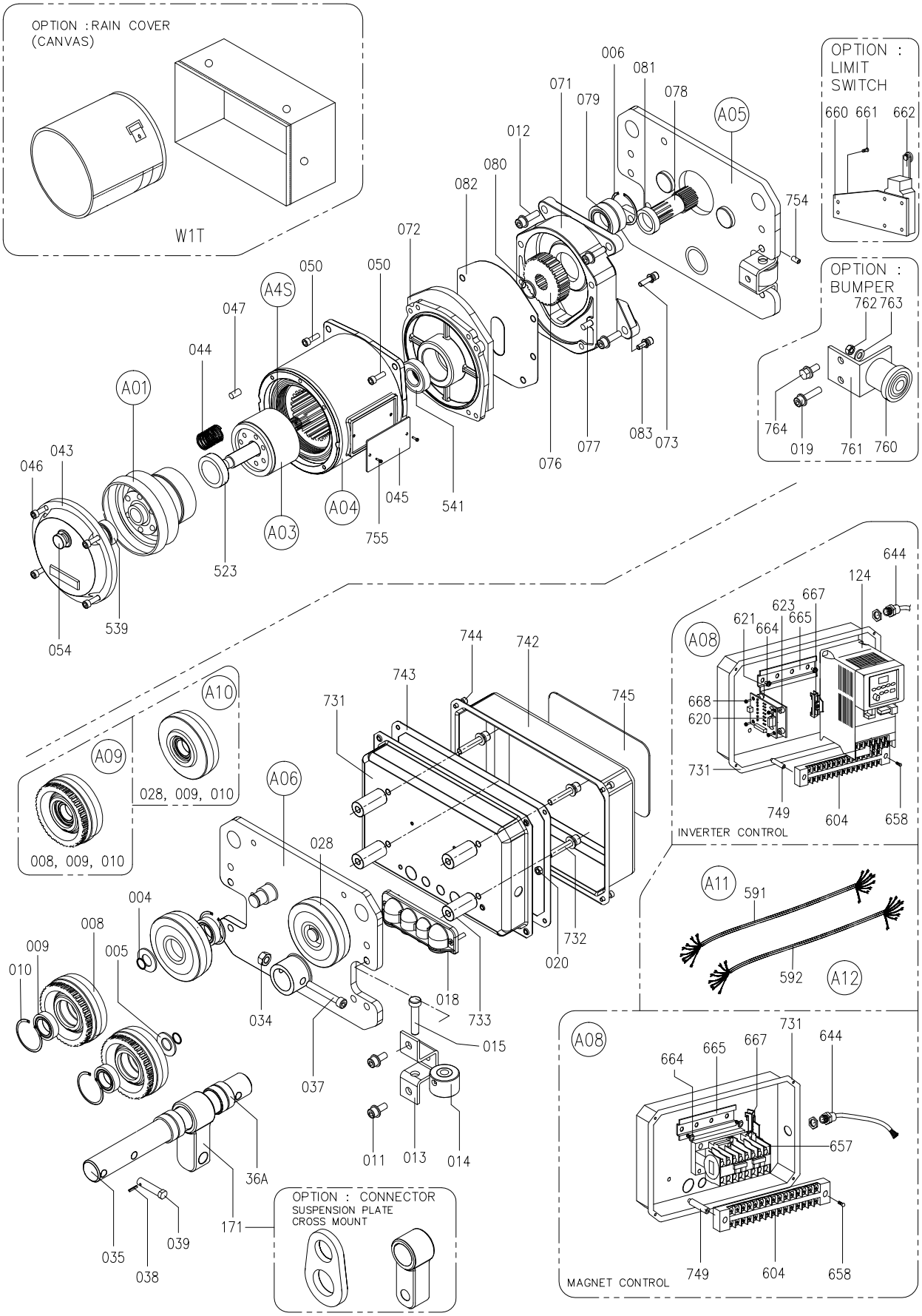

(DSM-15W & DSM-20W & VFD controls)

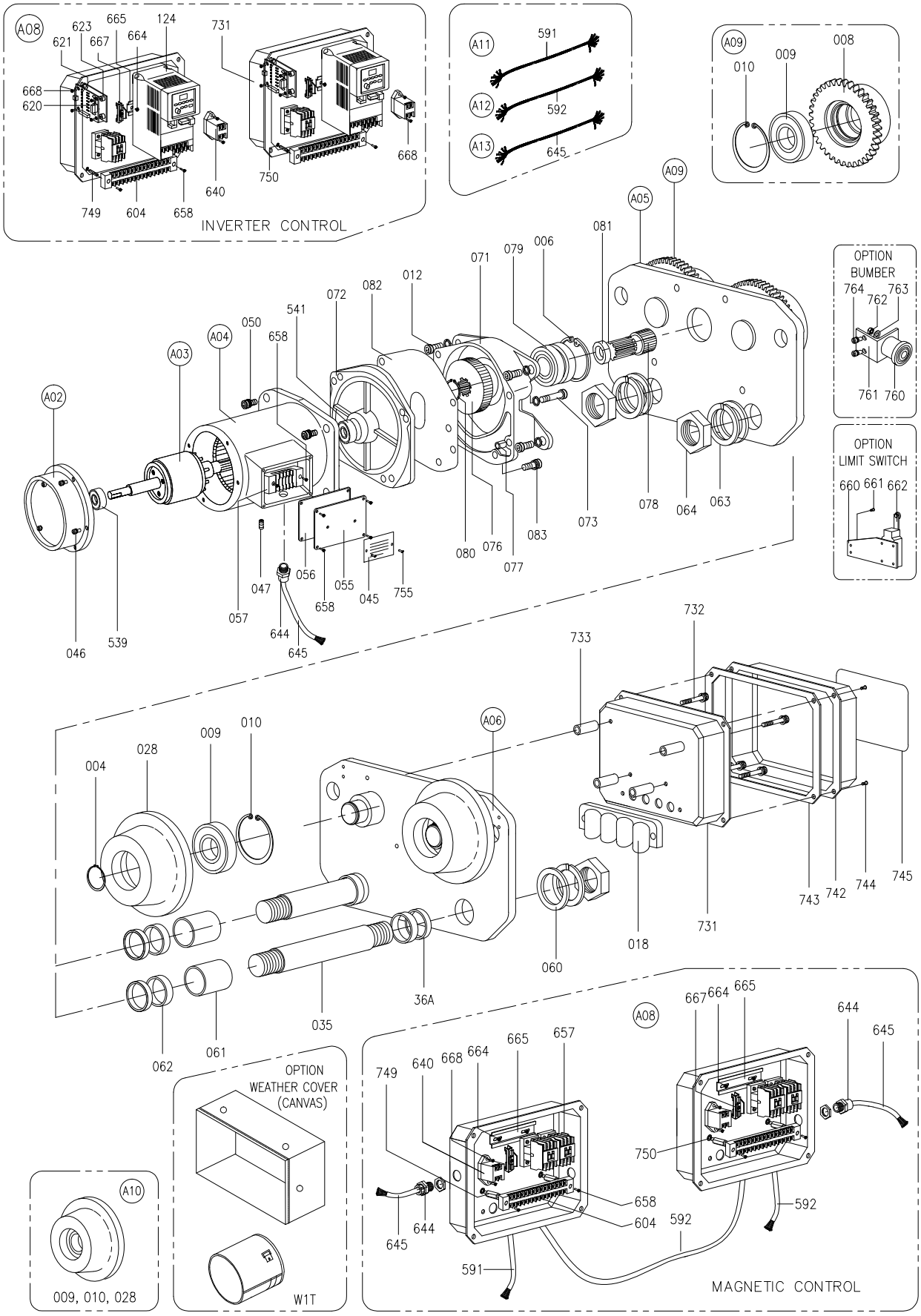

10.3 Exploded View of Hook Mounted Chain Hoist Parts for 7.5ton Capacity only

(DSA-7.5W and VFD control)

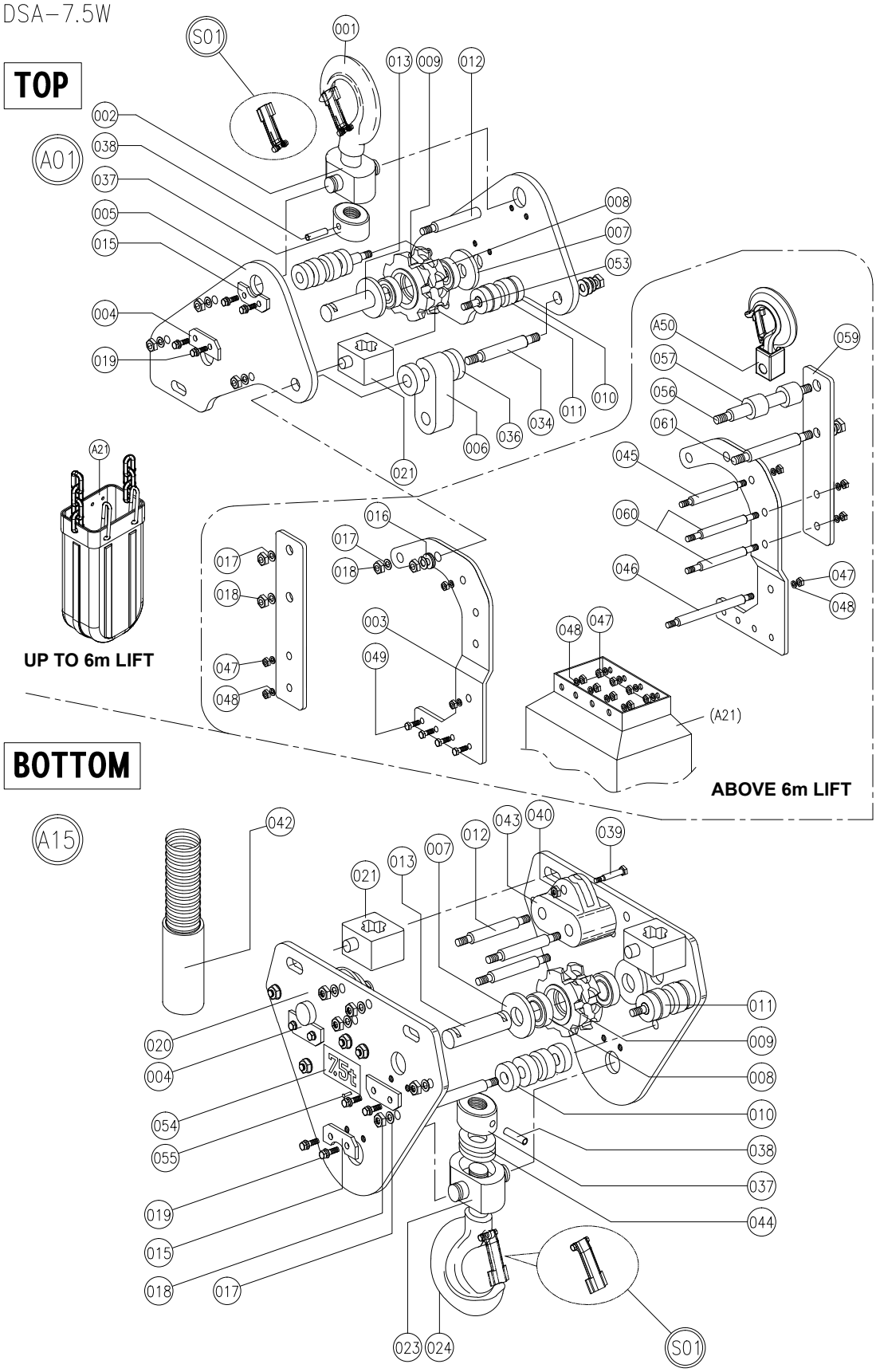

10.4 Exploded View of Trolley Mounted Chain Hoist Parts for 7.5ton Capacity only

(DSM-7.5W and VFD control)

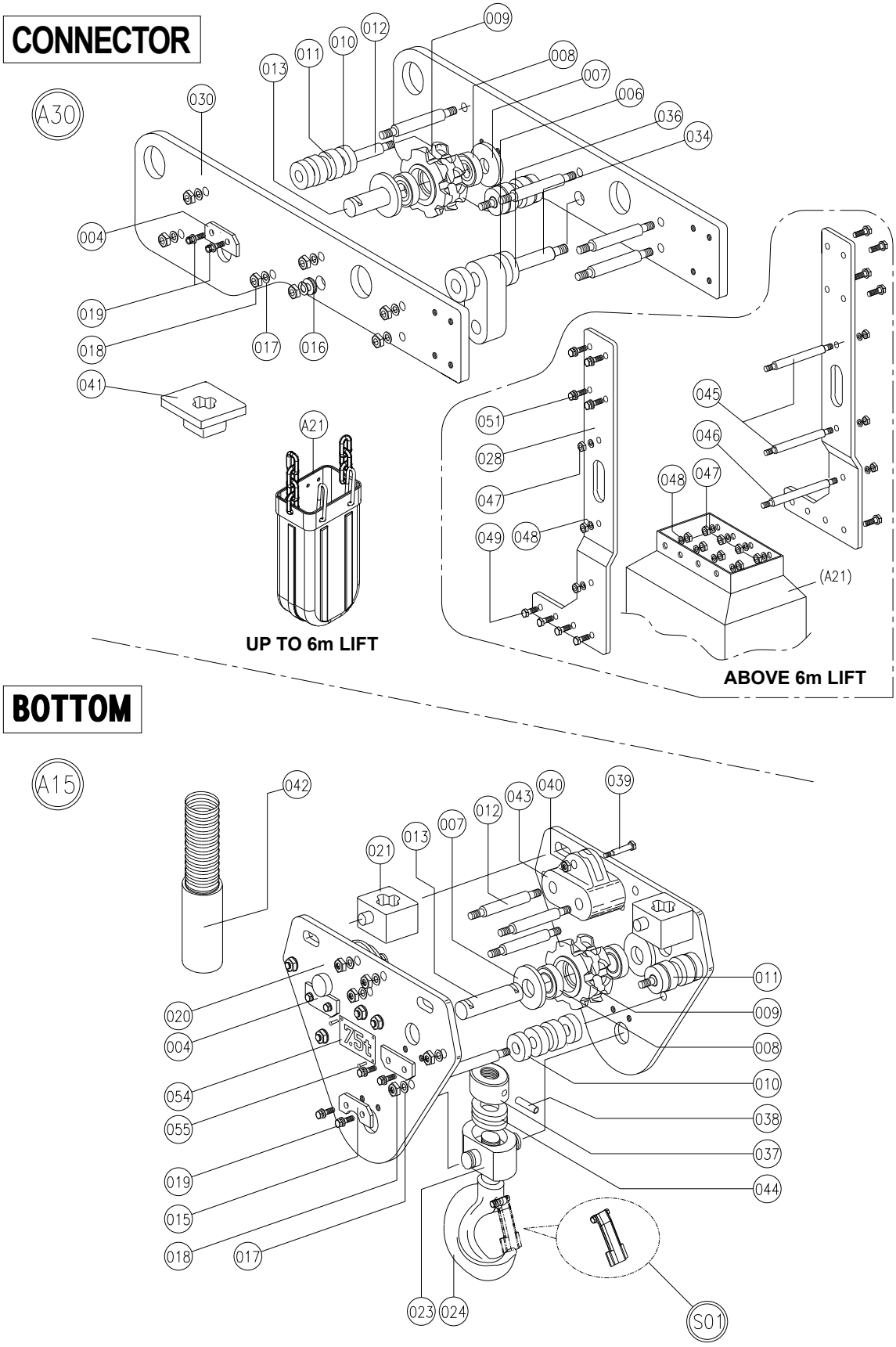

10.5 Exploded View of Hook Mounted Chain Hoist Parts for 10ton Capacity only

(DSA-10W & VFD control)

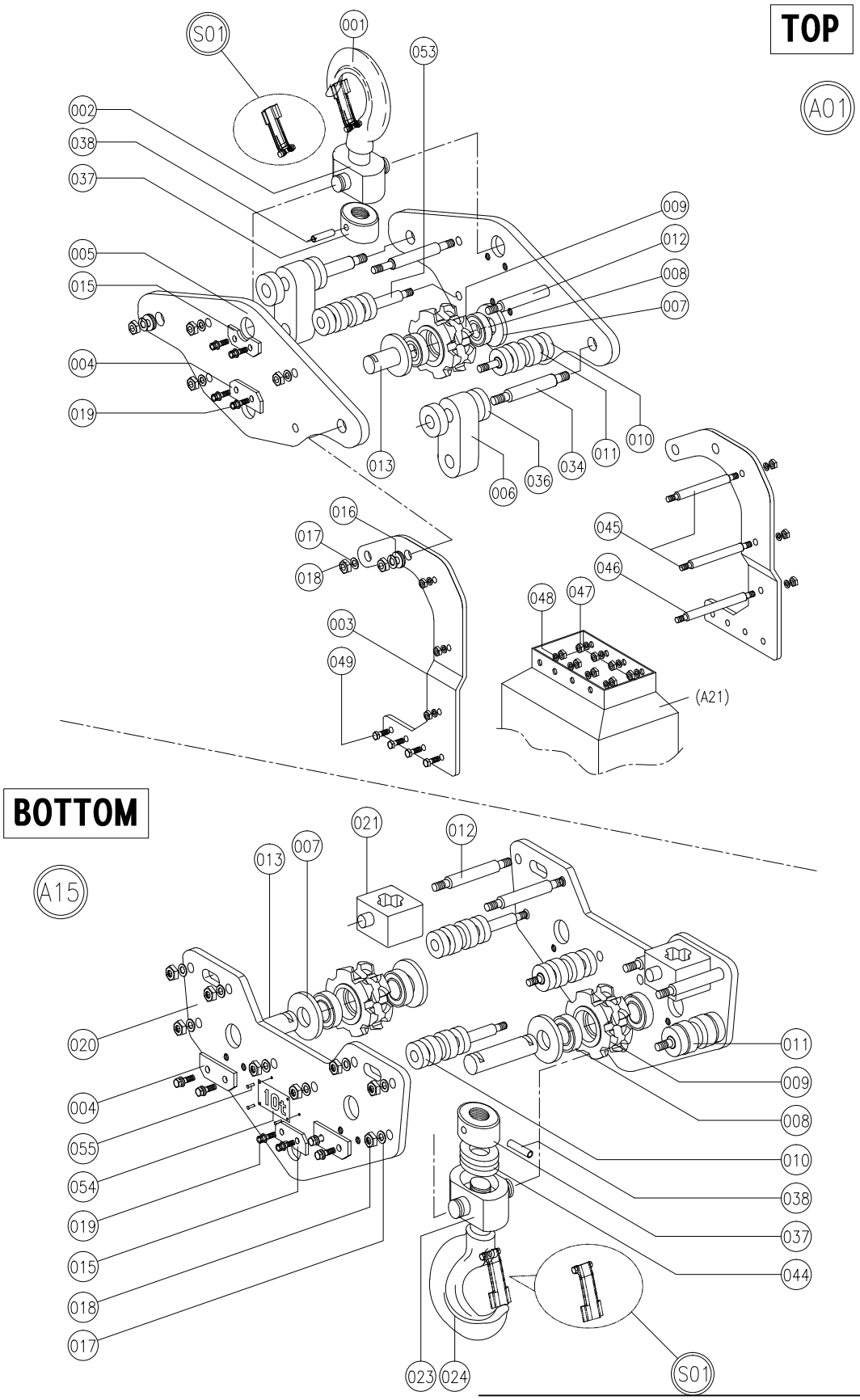

10.6 Exploded View of Trolley Mounted Chain Hoist Parts for 10ton Capacity only

(DSM-10W & VFD control)

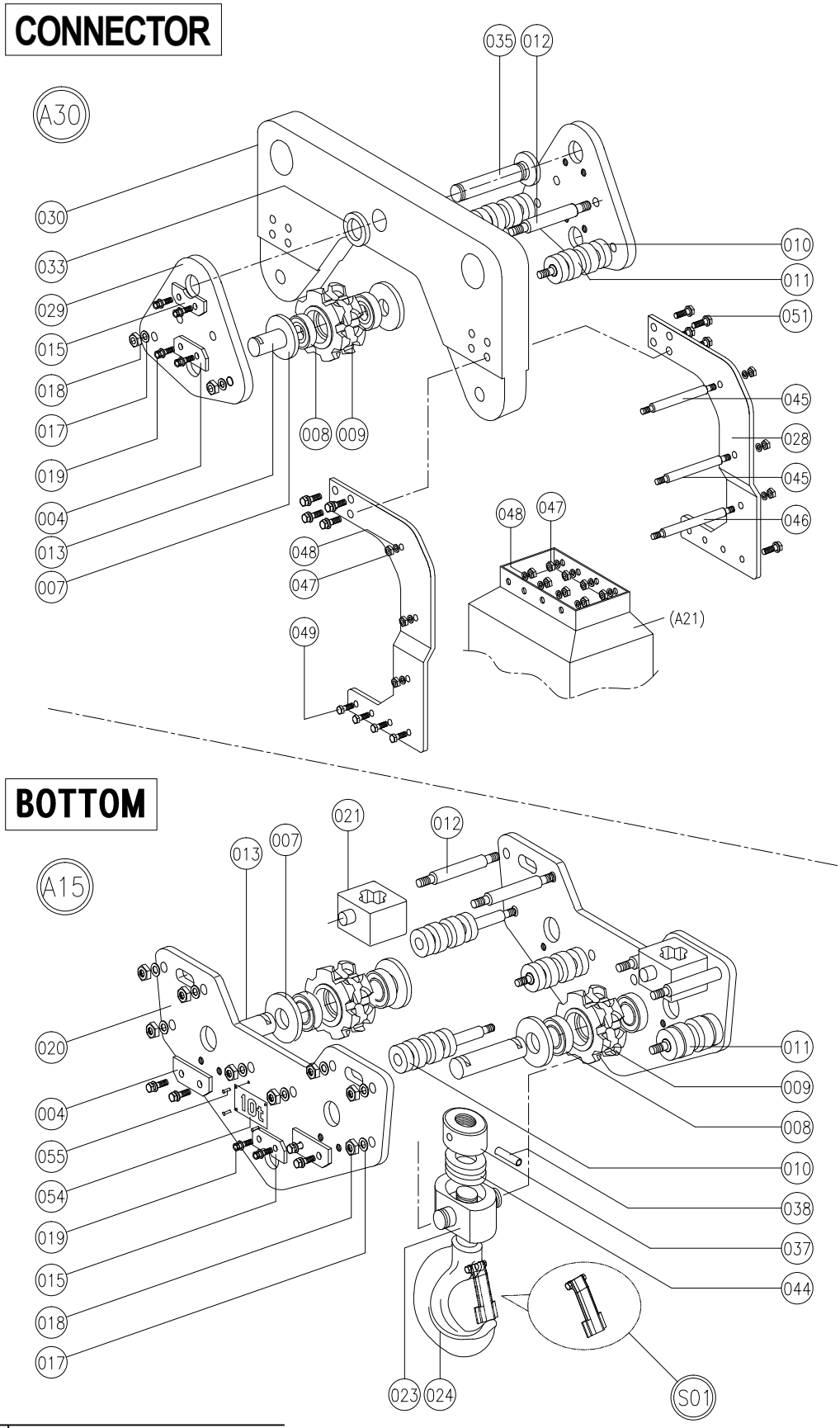

10.7 Exploded View of Hook Mounted Chain hoist Parts for 15ton Capacity only

(DSA-15W & VFD control)

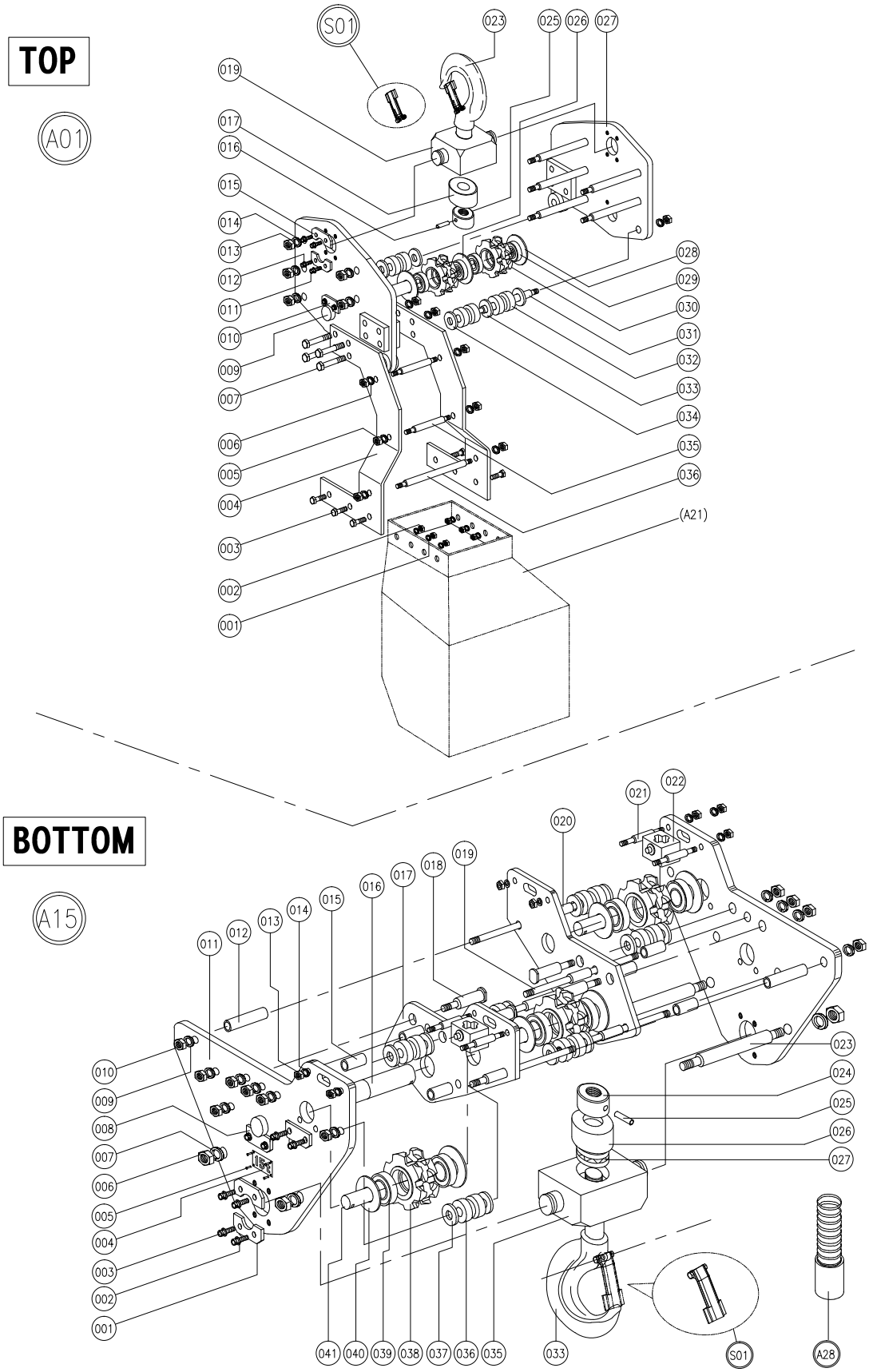

10.8 Exploded View of Trolley Mounted Chain Hoist Parts for 15ton Capacity only

(DSM-15W & VFD control)

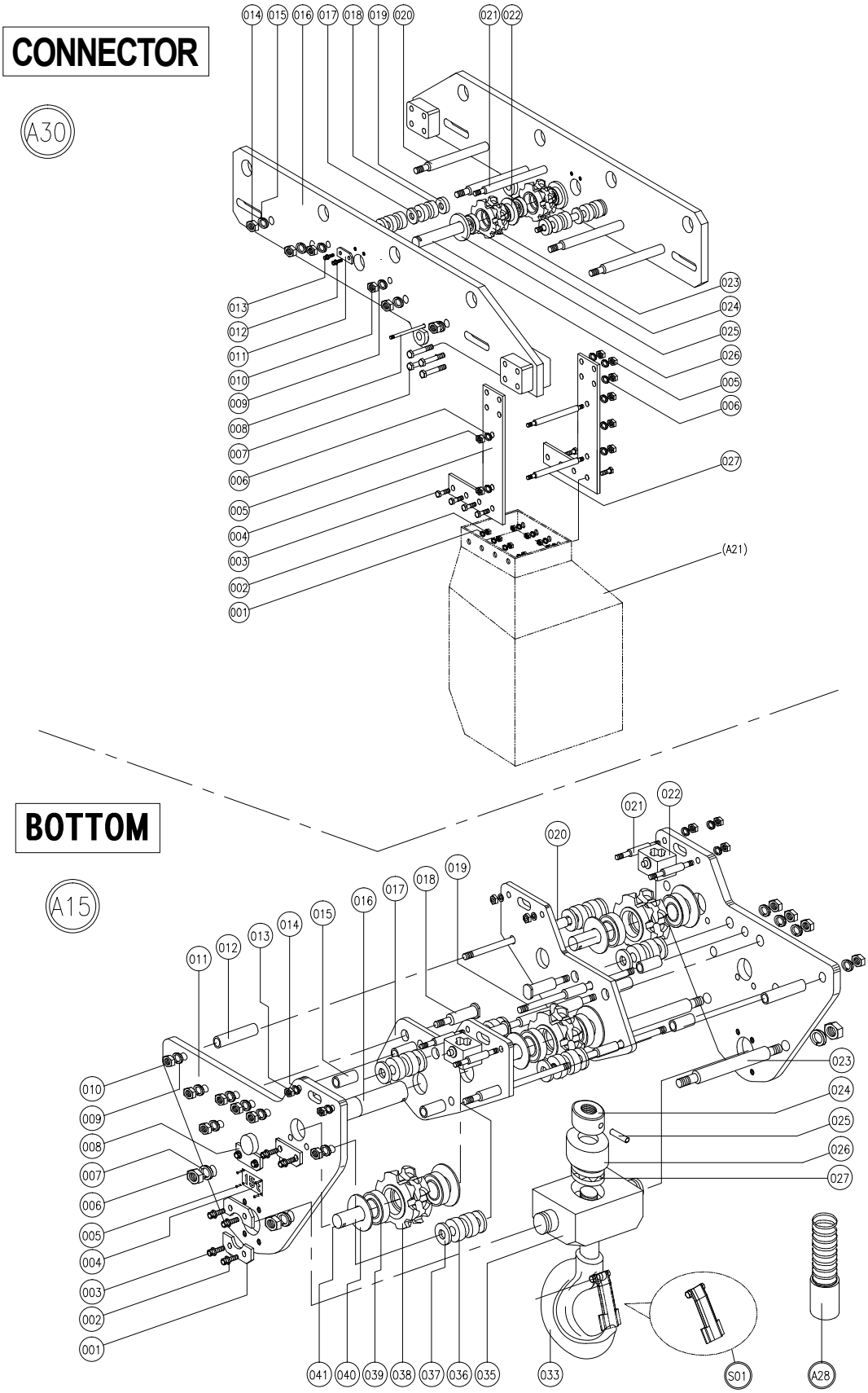

10.9 Exploded View of Hook Mounted Chain Hoist Parts for 20ton Capacity only

(DSA-20W & VFD control)

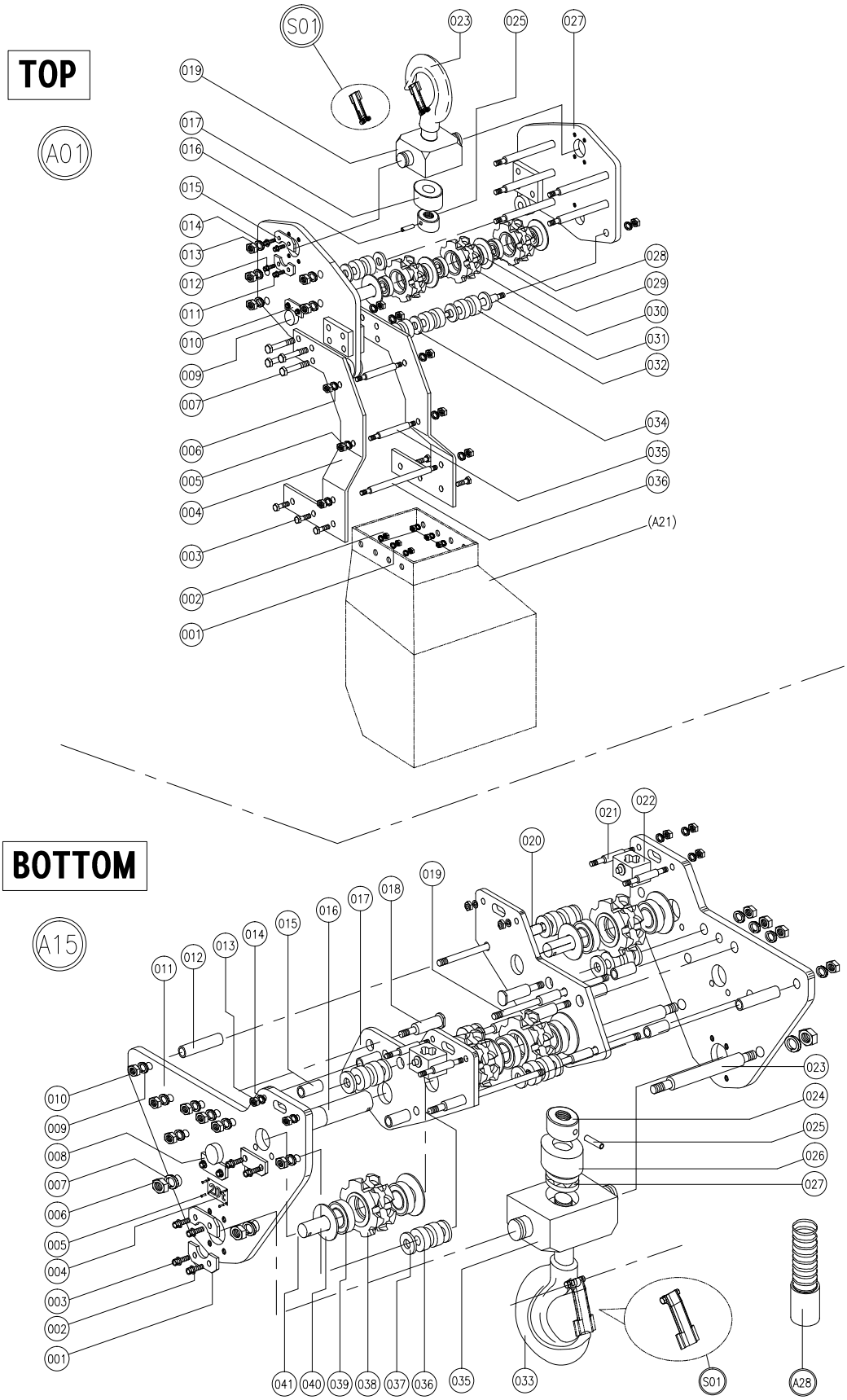

10.10 Exploded View of Trolley Mounted Chain Hoist Parts for 20ton Capacity only

(DSM-20W & VFD control)

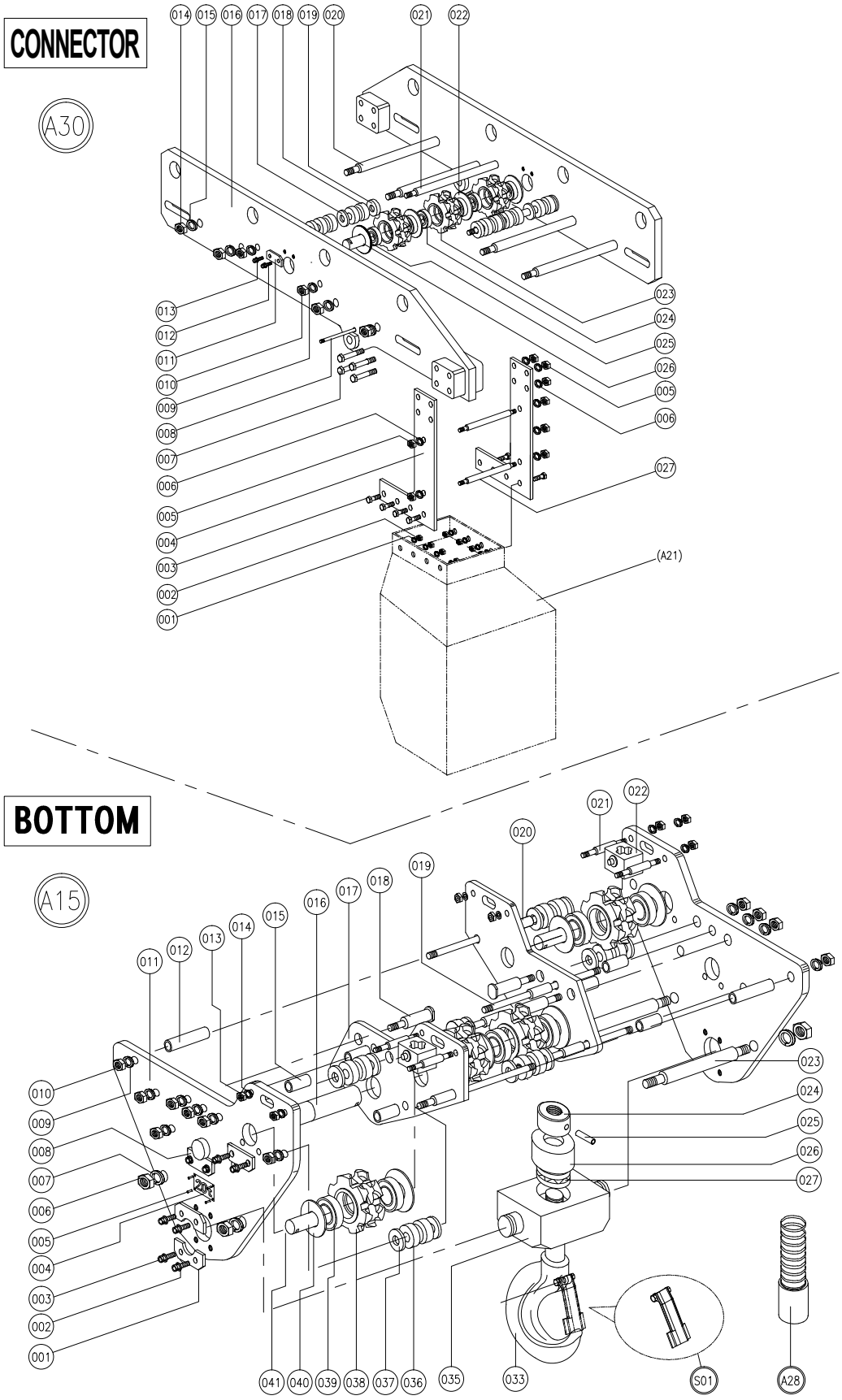

10.11 Exploded View of 3 & 5ton Low Headroom Hoist (Load Block)

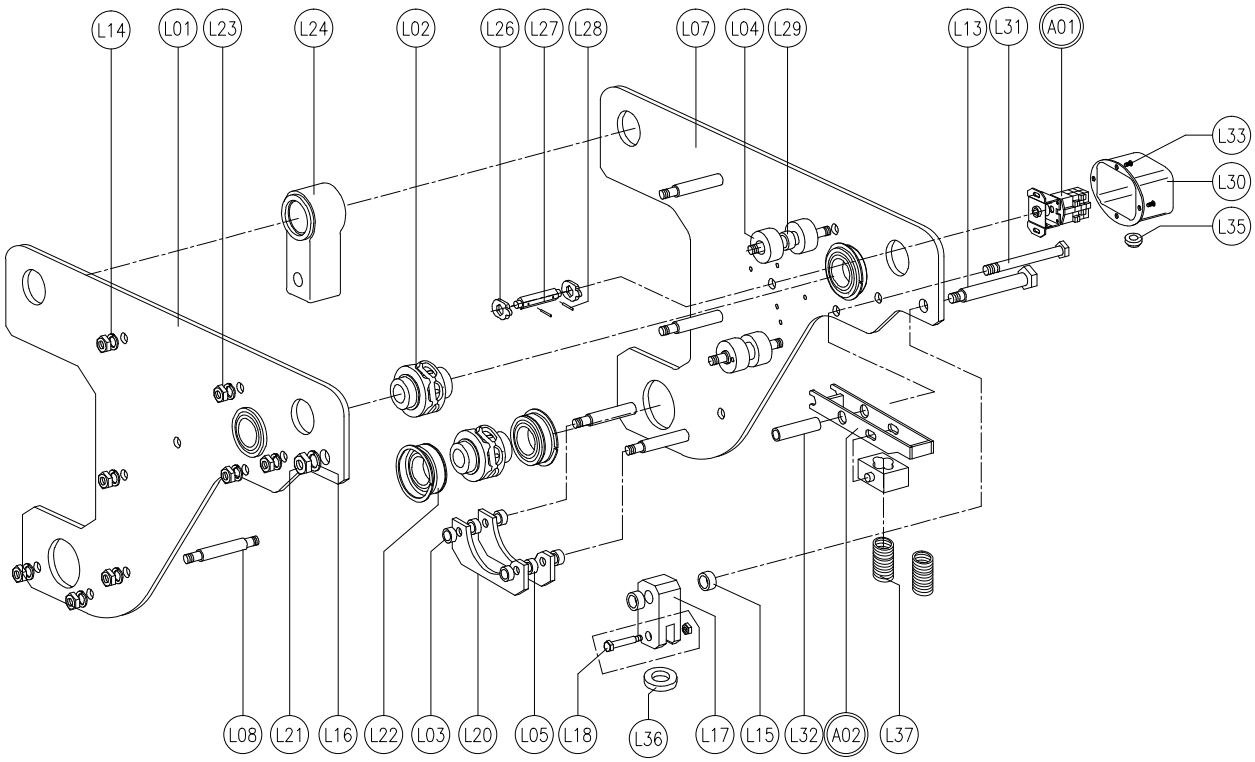

10.12 Exploded View of Lug Mount Trolley Kit 1,2,3,5 ton Capacity

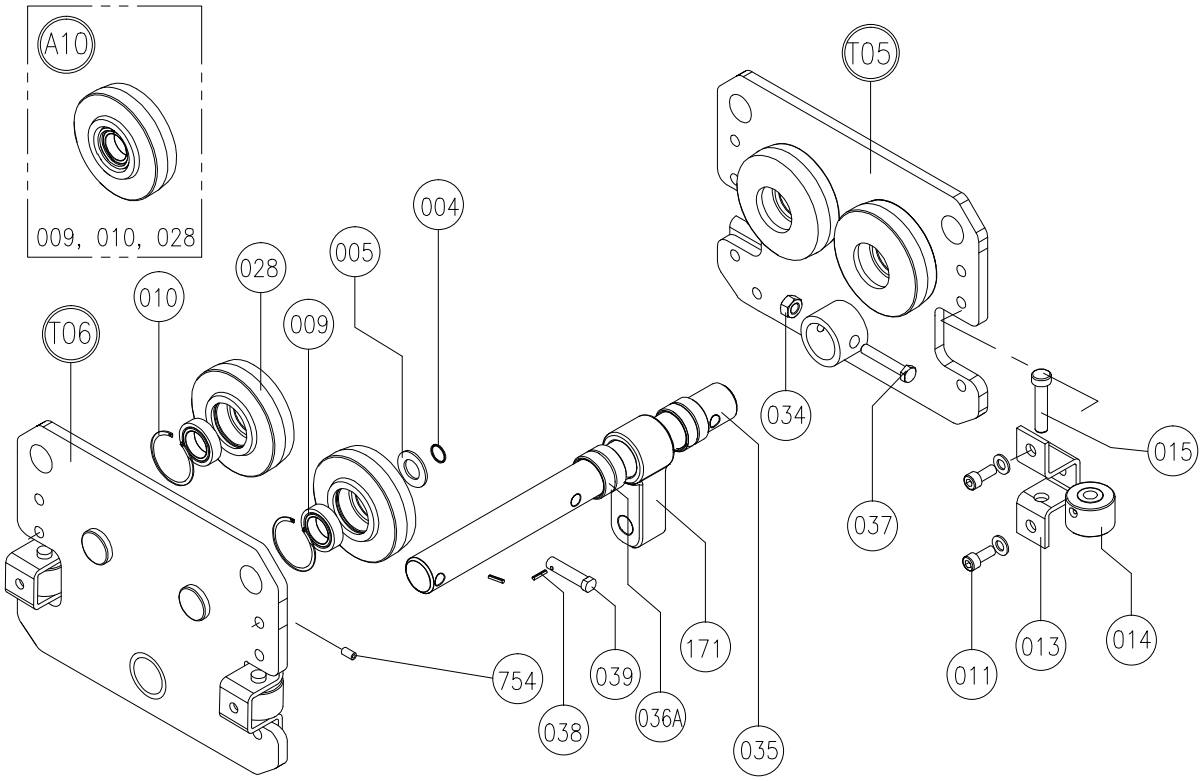

10.13 Exploded View of Arm block Ass'y

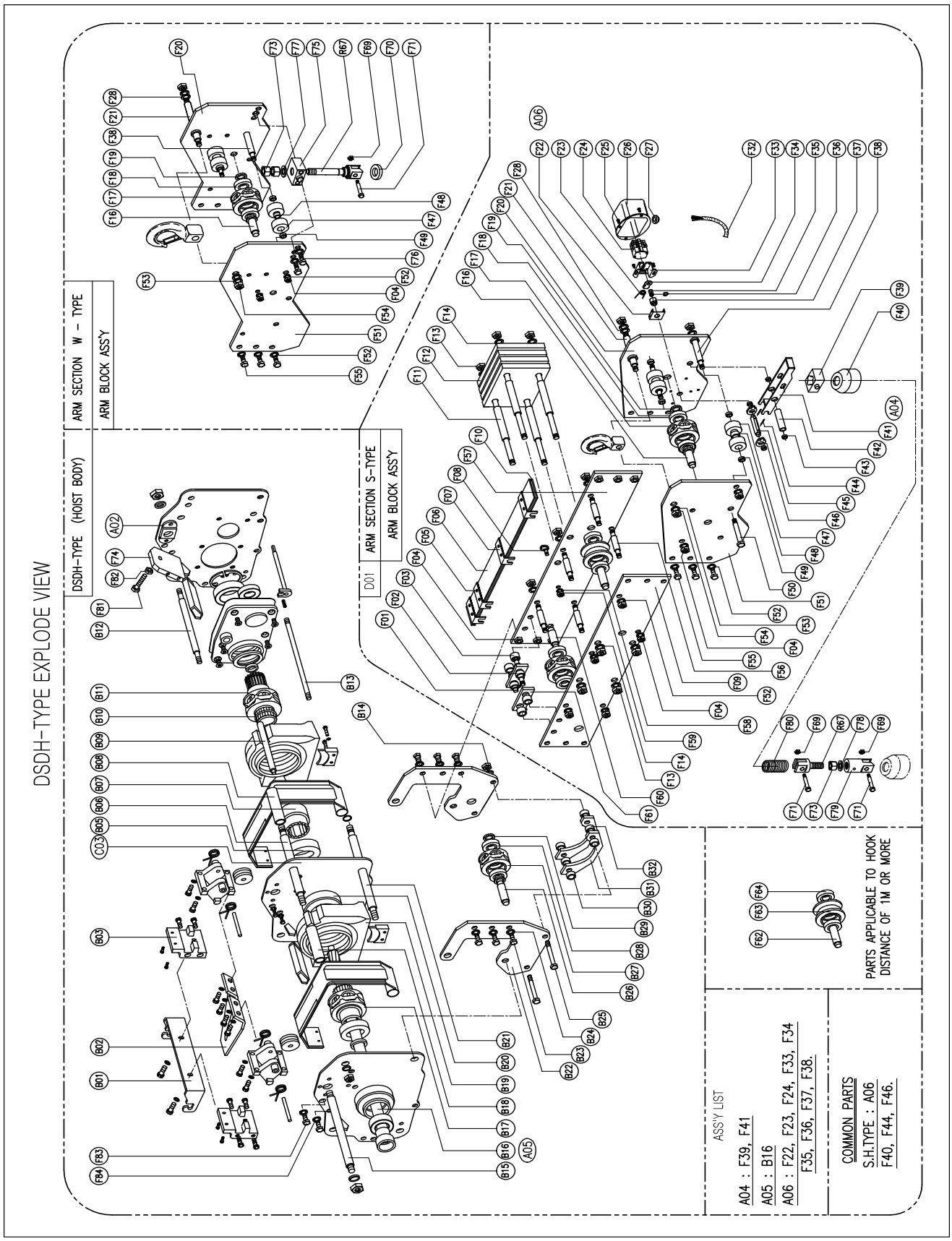

10.14 Exploded View of Assembled Parts

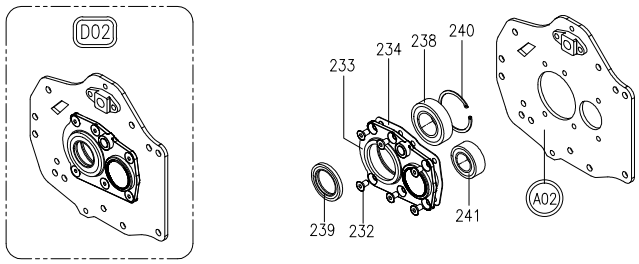

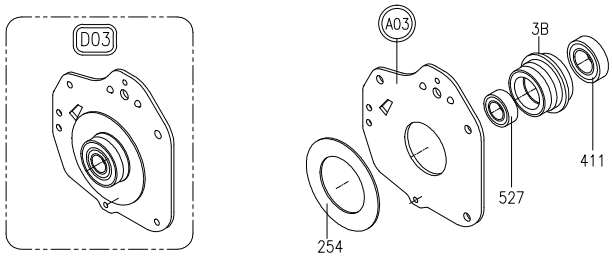

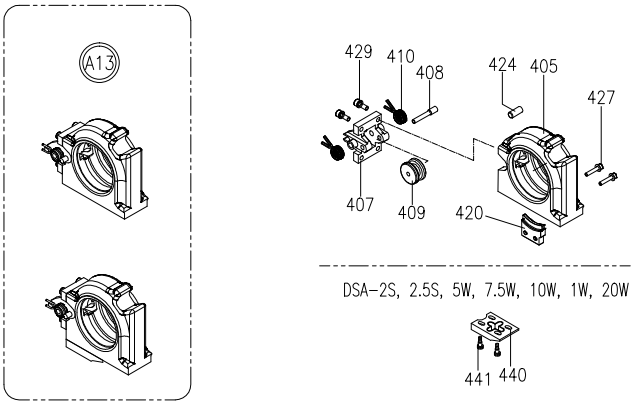

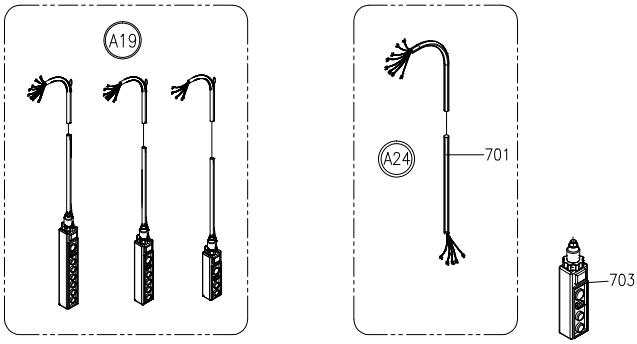

NO	DESCRIPTION	QT'Y	REMARKS
D10	PAWL COVER FULL ASS'Y	1	
A10	PAWL COVER ASS'Y	1	
328	AIR HOLE BOLT	1	
329	O RING	1	P-8A
519	PACKING PAWL COVER	1	
D02	GEAR SIDE FULL ASS'Y	1	
A02	GEAR SIDE PLATE ASS'Y	1	
232	SUNK BOLT	6	M8x15 / M10x15
233	FLANGE B	1	
234	PACKING FLANGE B	1	
238	BALL BEARING	1	6008ZZ / 6010ZZ
239	OIL SEAL	1	60x45x9/72x58x9
240	SNAP RING	1	R68 / R80
241	BALL BEARING	1	6204ZZ / 6306ZZ
D03	MOTOR SIDE FULL ASS'Y	1	
A03	MOTOR SIDE PLATE ASS'Y	1	
3B	BEARING HOUSING	1	
254	PLATE FOR LOCATING	1	
411	BALL BEARING	1	6008ZZ / 6210ZZ
527	BALL BEARING	1	6206ZZ / 6008ZZ
A13	CHAIN GUIDE ASS'Y	1	
405	CHAIN GUIDE	1	
407	ROLLER BOARD	1	
408	ROLLER PIN	1	
409	ROLLER	1	
410	INTERMEDIATE STICK SPRING	1	
420	STRIPPER	1	
424	CORRUGATED (SPRING PIN)	1	ø8x20/ø8x18
427	WRENCH BOLT S/W	2	M5x25 / M6x35
429	WRENCH BOLT S/W	4	M6x20 / M6x25
440	CHAIN GUIDE STOPPER	1	
441	HEX WRENCH BOLT(STOP)	4	
A19	PENDANT & CABLE ASS'Y	1	
A24	PENDANT CABLE ASS'Y	1	
701	PENDANT CABLE	1	
703	PENDANT ASS'Y	1	

10.15 Exploded View of 3-5 ton Ultalow Headroom chain hoist(load block)

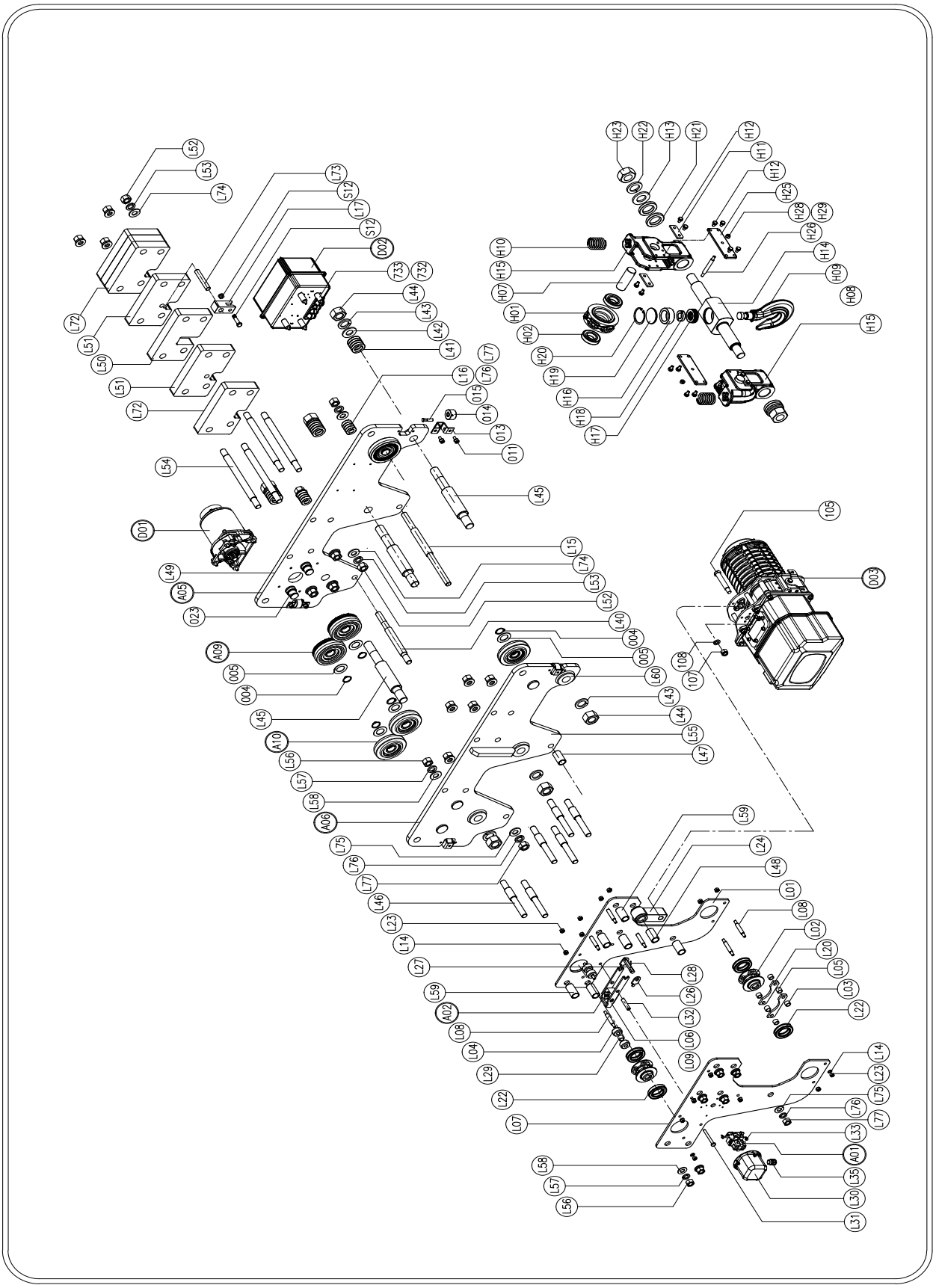

10.16 PART LIST

PARTS OF CHAIN HOIST

NO.	DESCRIPTION	UNIT	SIZE	DSA-1S EDSA-1S	DSA-2W EDSA-2W	DSA-1.5S EDSA-1.5S	DSA-2S EDSA-2S	DSA-2.5S EDSA-2.5S	EDSSA-3W	DSA-3W EDSA-3W	DSA-3S EDSA-3S	DSA-5W EDSA-5W	DSA-7.5W EDSA-7.5W	DSA-10W EDSA-10W	DSA-15W EDSA-15W	DSA-20W EDSA-20W
AA1	TOP HOOK AND ARM ASS'Y	SET		N/A		N/A					N/A		Refer to high capacity parts page			
	CROSS MOUNT TOP HOOK AND ARM ASS'Y (OPTION)	SET		N/A		N/A					N/A		N/A			
A01	TOP HOOK WITH LATCH	SET											Refer to high capacity parts page			
	CROSS MOUNT TOP HOOK WITH LATCH (OPTION)	SET											N/A			
D02	GEAR SIDE FULL ASS'Y	SET														
A02	GEAR SIDE PLATE ASS'Y	SET														
D03	MOTOR SIDE FULL ASS'Y	SET														
A03	MOTOR SIDE PLATE ASS'Y	SET														
A04	MOTOR ASS'Y (4P)	SET	MAGNETIC 220 / 380V INVERTER 380V						N/A							
		SET	INVERTER 220V													
A05	1ST GEAR ASS'Y	SET														
A06	ELECTRIC EQUIPMENT ASS'Y - MAGNET	SET	MC-12b/MC-22b - 48V UL NOT APPLICABLE						N/A							
	ELECTRIC EQUIPMENT ASS'Y - MAGNET	SET	MC-12b / MC-22b-110V						N/A							
	ELECTRIC EQUIPMENT ASS'Y (PF 523 TYPE) - INVERTER	SET	380V						N/A							
	ELECTRIC EQUIPMENT ASS'Y (PF 523 TYPE) - INVERTER	SET	220V													
A07	LOAD SHEAVE ASS'Y	SET	Ø 7.1 / Ø 9.5 / Ø 11.2													
A08	SHEAVE COVER ASS'Y	SET														
A09	RATCHET DISC ASS'Y	SET														
D10	PAWL COVER FULL ASS'Y	SET														
A10	PAWL COVER ASS'Y	SET														
A11	ROTOR ASS'Y	SET														
A12	BRAKE DISC ASS'Y	SET														
A13	CHAIN GUIDEASS'Y	SET	Ø 7.1 / Ø 9.5 / Ø 11.2													
A15	BOTTOM HOOK & BLOCK ASS'Y	SET											N/A			
A16	CAM LIMIT SWITCH ASS'Y	SET	HY-SO5-S-3 10A / HY-SO5-S-3 20A													
A17	LIMIT SWITCH LEVER ASS'Y	SET														
A19	PENDANT & CABLE ASS'Y(SINGLE SPEED)	SET	2P-0.75SQ x 5C													
	PENDANT & CABLE ASS'Y(SINGLE SPEED)	SET	4P-0.75SQ x 7C													
	PENDANT & CABLE ASS'Y(DUAL SPEED)	SET	2P-0.75SQ x 7C													
	PENDANT & CABLE ASS'Y(DUAL SPEED)	SET	4P-0.75SQ x 9C													
A22	BRAKE COIL ASS'Y(220V/380V)	SET	1.8KW / 3.5KW													
A23	INVERTER (PF 523 TYPE)2.2kW-3HP / 3.5kW-5HP / 3.7kW (1Ph)	EA	220V		N/A											
		EA	380V		N/A				N/A							
A24	PENDANT CABLE ASS'Y	SET	0.75SQ x 5C													
	PENDANT CABLE ASS'Y	SET	0.75SQ x 7C													
	PENDANT CABLE ASS'Y	SET	0.75SQ X 9C													
A25	POWER CABLE ASS'Y(1.5M)	SET	2.5SQ x 4C / 4.0SQ x 4C / 6.0SQ x 4C													
A26	TRANSFORMER ASS'Y(MAGNET)	SET	43VA, 75VA													
	TRANSFORMER ASS'Y(INVERTER)	SET	35VA													
S01	SAFETY LATCH SET	SET														
S02	TOP HOOK PIN SET	SET														
S03	EYE BOLT SET	SET	M8x15													
S04	CORD HOLDER SET	SET														
S05	CHAIN STOPPER SET	SET														
S06	CHAIN CONTAINER SUPPORT PIN SET	SET	M8 / M10													
S08	BEARING SUPPORT ASS'Y	SET														
S11	CONNECTING BOLT SET	SET		N/A		N/A					N/A		N/A			
S12	CHAIN ANCHORAGE BOLT SET	SET		N/A		N/A					N/A		N/A			
S13	BOTTOM HOOK LOAD BLOCK SET	SET		N/A		N/A					N/A		N/A			
S14	ARM ASS'Y	SET		N/A		N/A					N/A		N/A			
W1H	WEATHER COVER	EA													N/A	
4G	RIVET x 2	SET	Ø3.2x6													
7A	OIL SEAL	EA	D32x21x8 / D40x25x8													
8B	PACKING SHEAVE COVER	EA														
15A	BOTTOM HOOK WITH LATCH	EA											N/A			

NO.	DESCRIPTION	UNIT	SIZE	DSA-1S EDSA-1S	DSA-2W EDSA-2W	DSA-1.5S EDSA-1.5S	DSA-2S EDSA-2S	DSA-2.5S EDSA-2.5S	EDSSA-3W	DSA-3W EDSA-3W	DSA-3S EDSA-3S	DSA-5W EDSA-5W	DSA-7.5W EDSA-7.5W	DSA-10W EDSA-10W	DSA-15W EDSA-15W	DSA-20W EDSA-20W
15B	BOTTOM HOOK COVER	SET	2EA = 1SET		N/A				N/A				N/A			
15D	IDLE SHEAVE	EA		N/A			N/A				N/A		N/A			
15F	BOTTOM HOOK NUT	EA		N/A			N/A				N/A		N/A			
15G	SPRING PIN	EA	Ø4x35 / Ø5x45 / Ø6x50	N/A			N/A				N/A		N/A			
15H	IDLE SHEAVE PIN	EA		N/A			N/A				N/A		N/A			
15I	IDLE SHEAVE COLLAR	EA		N/A			N/A				N/A		N/A			
15J	COTTER PIN	EA		N/A			N/A				N/A		N/A			
15M	HEX BOLT	EA	M8x35 / M10x45		N/A				N/A				N/A			
15N	HEX BOLT	EA	M8x70 / M10x80 / M12x90	N/A			N/A				N/A		N/A			
15O	HEX NUT	EA	M8 / M10		N/A				N/A			N/A	N/A			
15O	U-NUT	EA	M8 / M10 / M12	N/A			N/A				N/A		N/A			
15P	SPRING WASHER	EA	M8 / M10		N/A				N/A			N/A	N/A			
15Q	THRUST BEARING	EA	51104 / 51205 / 51206 / 51207										N/A			
15R	ROLLER BEARING	EA	NF204 / NF206 / NF208	N/A			N/A				N/A		N/A			
15T	SPLIT RING	EA			N/A				N/A				N/A			
15X	HOOK NAME PLATE	EA		N/A			N/A				N/A		N/A			
203	STAY BOLT(A)	EA														
204	STAY BOLT(B)	EA														
205	STAY BOLT(C)	EA		N/A												
206	O RING	EA	P-14A	N/A												
207	HANGER HOLDING METAL	EA														
211	HEX NUT	EA	M10 / M12													
212	SPRING WASHER	EA	M10 / M12													
232	SUNK BOLT	EA	M8x15 / M10x15													
233	FLANGE B	EA														
234	PACKING FLANGE B	EA														
236	GEAR CASE	EA														
238	BALL BEARING	EA	6008ZZ / 6010ZZ													
3B	BEARING HOUSING	EA														
411	BALL BEARING	EA	6008ZZ / 6210ZZ													
527	BALL BEARING	EA	6206ZZ / 6008ZZ													
254	PLATE FOR LOCATING	EA														
239	OIL SEAL	EA	D60x45x9 / D72x58x9													
240	SNAP RING	EA	R68 / R80													
241	BALL BEARING	EA	6204ZZ / 6306ZZ													
245	HEX BOLT S/W	EA	M10x20 / M12x25													
252	BALL BEARING	EA	6204DD / 6205DD													
253	PACKING MOTOR CASE	EA														
258	HEX BOLT S/W	EA	M12x25	N/A												
303	2ND GEAR	EA														
304	3RD GEAR	EA														
305	4TH GEAR	EA														
322	BALL BEARING	EA	6301ZZ / 6303ZZ													
323	BALL BEARING	EA	6203ZZ / 6305ZZ													
324	PACKING GEAR CASE	EA														
326	HEX BOLT	EA	M10x10													
328	AIR HOLE BOLT	EA	M10x15													
329	O RING	EA	P-8A													
340	SPRING PIN	EA	Ø10x12 / Ø10.8x15													
361	CONTROL COVER - CONTACTOR	EA														
	CONTROL COVER - INVERTER HOIST	EA														
362	PACKING, CONTROL COVER	EA														
363	HEX BOLT S/W	EA	M6x10													
365	ELECTRIC COMPONENT BOARD	EA														
366	WRENCH BOLT S/W	EA	M6x20 / M8x20													
368	PACKING, ELECTRIC COMPONENT BOARD	EA														
369	LEAD WIRE	EA														
403	SNAP RING	EA	S-40 / S-50													
405	CHAIN GUIDE	EA														
406	ANTI-ROTATION PIN	EA														
407	ROLLER BOARD	EA														
408	ROLLER PIN	EA														
409	ROLLER	EA														

NO.	DESCRIPTION	UNIT	SIZE	DSA-1S EDSA-1S	DSA-2W EDSA-2W	DSA-1.5S EDSA-1.5S	DSA-2S EDSA-2S	DSA-2.5S EDSA-2.5S	EDSSA-3W	DSA-3W EDSA-3W	DSA-3S EDSA-3S	DSA-5W EDSA-5W	DSA-7.5W EDSA-7.5W	DSA-10W EDSA-10W	DSA-15W EDSA-15W	DSA-20W EDSA-20W
410	INTERMEDIATE STICK SPRING	EA														
420	STRIPPER	EA														
424	CORRUGATED (SPRING PIN)	EA	Ø8x20 / Ø8x18													
427	WRENCH BOLT S/W	EA	M5x25 / M6x35													
429	WRENCH BOLT S/W	EA	M6x20 / M6x25													
440	CHAIN GUIDE STOPPER	EA		N/A		N/A			N/A							
441	HEX WRENCH BOLT(STOP)	EA	M6x20	N/A		N/A			N/A							
504	BUSH FOR RATCHET DISC	EA														
505	DISC HUB	EA														
508	SPLIT RING	EA														
509	STOPPER RING	EA														
516	WRENCH BOLT S/W	EA	M6x20 / M8x25													
519	PACKING PAWL COVER	EA														
536	PACKING BRAKE STATOR	EA														
537	SPRING COVER	EA														
538	PACKING SPRING COVER	EA														
539	WRENCH BOLT S/W	EA	M6x20													
540	BRAKE SPRING	EA														
554	WRENCH BOLT S/W	EA	M6x35 / M8x35													
557	BRAKE STATOR	EA														
560	CORD PRESSING METAL	EA														
561	MACHINE SCREW S/W	EA	M4x8													
564	MOVING CORE	EA														
569	SNAP RING	EA														
572	PACKING BEARING SUPPORT	EA														
575	SPRING PIN	EA	Ø8x32 /Ø10x35													
576	WRENCH BOLT S/W	EA	M6x20 / M8x20													
591	POWER CABLE	M	2.5SQ X 4C / 4.0SQ X 4C / 6.0SQ X 4C													
600	MAGNETIC CONTACTOR (CONTACTOR)	EA	MC-12b/MC-22b-48V UL NOT APPLICABLE						N/A							
		EA	MC-12b / MC-22b-110V						N/A							
	MAGNETIC CONTACTOR (VFD)	EA	GMC-12M 1a (48V) UL NOT APPLICABLE													
		EA	GMC-12M 1a (110V)													
602	TRANSFORMER (CONTACTOR)	EA	45VA/85VA (48V) UL NOT APPLICABLE						N/A							
		EA	45VA/85VA (110V)						N/A							
	TRANSFORMER (VFD)	EA	35VA (VFD-48V) UL NOT APPLICABLE													
		EA	35VA (VFD-110V)													
604	TERMINAL BLOCK(MAGNETIC)	EA	6P/15P(MAGNETIC)						N/A							
	TERMINAL BLOCK(INVERTER)	EA	12P/15P (INVERTER)													
620	INTERFACE	EA	INVERTER 48V UL NOT APPLICABLE													
	INTERFACE - 110V	EA	INVERTER 110V													
621	INTERFACE BOARD	EA	INVERTER													
622	TERMINAL BLOCK BOARD	EA	INVERTER			N/A										
623	PCB SUPPORT BAR	EA	H5xØ4													
650	EQUIPMENT BOARD	EA	MAGNETIC						N/A							
	EQUIPMENT BOARD	EA	INVERTER													
658	MACHINE SCREW S/W	EA	M4x12													
660	FUSE HOLDER	EA	3P													
662	FUSE	EA	250V 1A													
663	RECTIFIER	EA	SR-304 3A													
665	CHANNEL STOPPER	EA							N/A							
666	MACHINE SCREW S/W P/W(L)	EA	M4x8													
667	CHANNEL	EA	115mm						N/A							
668	MACHINE SCREW S/W P/W(S)	EA	M4x12													
669	JOINT PIPE	EA														
674	HEX STAY PIN	EA	64mm													
679	TUBE	M														
701	PENDANT CABLE (5C)	M	0.75SQ x 5C													
	PENDANT CABLE (7C)	M	0.75SQ x 7C													
	PENDANT CABLE (9C)	M	0.75SQ x 9C													

NO.	DESCRIPTION	UNIT	SIZE	DSA-1S EDSA-1S	DSA-2W EDSA-2W	DSA-1.5S EDSA-1.5S	DSA-2S EDSA-2S	DSA-2.5S EDSA-2.5S	EDSSA-3W	DSA-3W EDSA-3W	DSA-3S EDSA-3S	DSA-5W EDSA-5W	DSA-7.5W EDSA-7.5W	DSA-10W EDSA-10W	DSA-15W EDSA-15W	DSA-20W EDSA-20W
703	PENDANT ASS'Y (2 BUTTON)	EA														
	PENDANT ASS'Y (2 BUTTON, DUAL SPEED)	EA														
	PENDANT ASS'Y (4 BUTTON)	EA														
	PENDANT ASS'Y (4 BUTTON, DUAL SPEED)	EA														
	PENDANT ASS'Y (6 BUTTON)	EA														
	PENDANT ASS'Y (6 BUTTON, DUAL SPEED)	EA														
749	HEX STAY PIN	EA	116mm	N/A						N/A						
750	PLAIN WASHER	EA	M6													
800	LOAD CHAIN	M	per meter													
815	CHAIN STOPPER SPRING	EA													N/A	
843	CHAIN COTAINER SUPPORT METAL	EA														
853	HEX BOLT S/W	EA	M10x20													
940	NAME PLATE	EA														
942	MOTOR NAME PLATE	EA	4POLE													
950	LOAD LIMITER ASS'Y	SET	JDL-100													
951	LOAD LIMITER BOARD	EA														
952	MACHINE SCREW S/W P/W(L)	EA	M4x12													
953	MACHINE SCREW S/W P/W(S)	EA	M4x8													
A21	CHAIN CONTAINER ASS'Y (20FT LIFT)	SET														
	CHAIN CONTAINER ASS'Y (LIFT)	EA	PCCA	15M (50FT)	7.5M (25FT)	6M (20FT)	6M (20FT)	6M (20FT)	6M(20FT)	6M(20FT)	6M (20FT)	N/A				
	CHAIN CONTAINER ASS'Y (LIFT)	EA	PCCB	40M(130FT)	20M(65FT)	18M(60FT)	18M(60FT)	18M(60FT)	12M(40FT)		18M(60FT)	9M(30FT)	6M(20FT)	N/A		
	STEEL CHAIN CONTAINER ASS'Y (LIFT)	EA	SCC1	N/A									N/A			
	STEEL CHAIN CONTAINER ASS'Y (LIFT)	EA	SCC1-1	50M(164FT)	25M(82FT)	N/A										
	STEEL CHAIN CONTAINER ASS'Y (LIFT)	EA	SCC2-1	82M(269FT)	41M(135FT)	N/A										
	STEEL CHAIN CONTAINER ASS'Y (LIFT)	EA	SCC3	N/A		30M (98FT)	30M (98FT)	30M (98FT)	20M (66FT)		30M (98FT)	15M (49FT)	10M(33FT)	15M(49FT)	N/A	
	STEEL CHAIN CONTAINER ASS'Y (LIFT)	EA	SCC4	N/A		50M(164FT)	50M(164FT)	50M(164FT)	31M(102FT)		50M(164FT)	25M(82FT)	16.7M(55FT)	25M(82FT)	N/A	
	STEEL CHAIN CONTAINER ASS'Y (LIFT)	EA	SCC5	N/A		80M(262FT)	80M(262FT)	80M(262FT)	50M(164FT)		80M(262FT)	40M(131FT)	26M(87FT)	40M(131FT)	N/A	
	STEEL CHAIN CONTAINER ASS'Y (LIFT)	EA	SCC6	N/A		99M(325FT)	99M(325FT)	99M(325FT)	60M(197FT)		99M(325FT)	49M(163FT)	33M(109FT)	49M(163FT)	N/A	
	STEEL CHAIN CONTAINER ASS'Y (LIFT)	EA	SCC10	N/A											8M(26FT)	6M(20FT)
	STEEL CHAIN CONTAINER ASS'Y (LIFT)	EA	SCC11	N/A											20M(66FT)	15M(50FT)
	CANVAS CHAIN CONTAINER ASS'Y (LIFT)	EA	CCC-300	12M (40FT)	6M (20FT)	4.5M (15FT)	4.5M (15FT)	4.5M (15FT)	N/A		N/A	N/A				
	CANVAS CHAIN CONTAINER ASS'Y (LIFT)	EA	CCC-400	20M (66FT)	10M (33FT)	7.5M (25FT)	7.5M (25FT)	7.5M (25FT)	N/A		7.5M (25FT)	N/A				

PARTS OF MOTOR TROLLEY

NO.	DESCRIPTION	UNIT	SIZE	DSM-1S EDSM-1S	DSM-2W EDSM-2W	DSM-1.5S EDSM-1.5S	DSM-2S EDSM-2S
A01	BRAKE ASS'Y	SET					
S02	BRAKE DISC ASS'Y	SET					
A03	ROTOR ASS'Y	SET	3PHSKEW 1.5				
A4S	STATOR ASS'Y	SET		N/A			
A04	MOTOR ASS'Y	SET	3PH 0.4KW 220/380V				
A05	GEAR SIDE PLATE ASS'Y	SET					

NO.	DESCRIPTION	UNIT	SIZE	DSM-1S EDSM-1S	DSM-2W EDSM-2W	DSM-1.5S EDSM-1.5S	DSM-2S EDSM-2S
A06	PLAIN SIDE PLATE ASS'Y	SET					
A08	ELECTRIC EQUIPMENT ASS'Y-CONTACTOR	SET	3PH 220/380V				
	ELECTRIC EQUIPMENT ASS'Y-VFD	SET	220V				
	ELECTRIC EQUIPMENT ASS'Y-VFD	SET	380V				
A09	GEARED WHEEL ASS'Y	SET					
A10	PLAIN WHEEL ASS'Y	SET					
A11	POWER CABLE ASS'Y (1.5M)	SET	2.5SQx4C / 4.0SQx4C				
A12	COMBINED CABLE ASS'Y (1.5M)	SET	2.5SQx4C + 1.5SQx8C /4.0SQx4C + 1.5SQx8C				
A13	MOTOR CABLE ASS'Y (1M)	SET	0.75SQx12C				
W1T	WEATHER COVER	SET		N/A			
004	SNAP RING	EA	S17 / S25				
005	PLAIN WASHER	EA	32x18 / 40x26.5				
006	SNAP RING	EA	R-52				
008	GEARED WHEEL	EA					
009	BALL BEARING	EA	6203ZZ / 6205ZZ				
010	SNAP RING	EA	R-40 / R-52				
011	WRENCH BOLT S/W	EA	M10x20				
012	HEX BOLT S/W P/W	EA	M8x20				
013	GUIDE ROLLER BODY	EA					
014	GUIDE ROLLER	EA					
015	GUIDE ROLLER PIN	EA					
018	CORD HOLDER SET	SET					
019	BALL BEARING	EA	6003ZZ				
028	PLAIN WHEEL	EA					
034	U NUT	EA	M10				
035	SHAFT	EA					
036A	ADJUSTING COLLAR	EA					
037	WRENCH BOLT	EA	M10x60 / M10x70				
038	COTTER PIN	EA	Ø3x25				
039	STOPPER PIN	EA					
041	MOTOR CASE						
043	BRAKE COVER	EA					
044	BRAKE SPRING	EA					
045	MOTOR NAME PLATE		3PH VFD, CONTACTOR				
046	WRENCH BOLT S/W	EA	M8x20				
055	TERMINAL BLOCK COVER	EA					
056	PACKING COVER	EA					
057	TERMINAL BLOCK	EA	6P 250VAC 20A				
076	2ND GEAR	EA					
077	SPRING PIN	EA	Ø10x12				
078	3RD GEAR	EA					
079	BALL BEARING	EA	6205ZN				
080	SNAP RING	EA	S-25				
081	COLLAR FOR 3RD GEAR	EA					
082	PACKING FLANGE	EA					
124	INVERTER (2HP)	EA	NC0 110/200V				
		EA	NC0 380V				
125	MACHINE SCREW S/W	EA	M4x16				
126	MACHINE SCREW S/W P/W(S)	EA	M4x8				
137	MAGNETIC CONTACTOR	EA	3PH GMC-12M 1b				
141	STARTING SWITCH	EA					
144	CAPACITOR	EA					

NO.	DESCRIPTION	UNIT	SIZE	DSM-1S EDSM-1S	DSM-2W EDSM-2W	DSM-1.5S EDSM-1.5S	DSM-2S EDSM-2S
145	CONDENSER HOLDER	EA					
146	MACHINE SCREW S/W P/W(L)	EA	M4x12				
150	CHANNEL	EA	115mm				
171	SUSPENSION PLATE (OPTION)	EA					
	CONNECTOR - PARALLEL	EA					
	CONNECTOR - CROSS MOUNT (OPTION)	EA					
524	WRENCH BOLT S/W	EA	M5x12				
534	MOVING CORE	EA					
539	BALL BEARING	EA	6203DD				
541	BALL BEARING	EA	6203DD				
591	POWER CABLE	M	2.5SQx4C / 4.0SQx4C				
592	COMBINED CABLE	M	2.5SQx4C + 1.5SQx8C /4.0SQx4C + 1.5SQx8C				
604	TERMINAL BLOCK	EA	12P 250VAC 20A				
		EA	15P 250VAC 20A				
620	INTERFACE	EA	110V				
621	INTERFACE BOARD	EA					
623	PCB SUPPORT BAR	EA	H5xØ4				
644	CABLE GLAND	EA	PG13.5				
645	MOTOR CABLE	SET	0.75SQx12C				
646	CABLE GLAND	EA	PG21				
658	MACHINE SCREW S/W	EA	M4x12				
660	LIMIT SWITCH BOARD (OPTION)	EA					
661	WRENCH BOLT S/W (OPTION)	EA	M6x20				
662	LIMIT SWITCH (OPTION)	EA	HY-M904				
666	HEX BOLT S/W	EA	M6x10				
667	CHANNEL STOPPER	EA					
731	CONTROL BOX	EA	MAGNET				
		EA	INVERTER				
732	WRENCH BOLT S/W	EA	M8x35				
733	SUPPORT BAR	EA					
734	ELECTRIC EQUIPMENT BOARD	EA	MAGNET				
735	HEX STAY PIN	EA					
742	CONTROL BOX COVER	EA					
743	CONTROL BOX PACKING	EA					
744	MACHINE SCREW S/W	EA	M5*12				
745	NAME PLATE	EA					
749	HEX STAY PIN	EA	63mm				
		EA	VFD 102mm				
750	PLAIN WASHER	EA	M6				
754	SET SCREW	EA	M10x10				
755	RIVET	EA	Ø2.4*8				
760	BUMPER STOPPER (OPTION)	EA					
761	BUMPER BRACKET (OPTION)	EA					
762	HEX NUT (OPTION)	EA	M10				
763	SPRING WASHER (OPTION)	EA	M10				
764	HEX BOLT S/W	EA	M10x20				
11A	HEX WRENCH BOLT S/W	EA	M10x40				

NO.	DESCRIPTION	UNIT	SIZE	DSM-2.5S	DSM-3S	DSM-3W EDSM-3W	DSM-5W EDSM-5W	DSM-7.5W EDSM-7.5W	DSM-10W EDSM-10W	DSM-15W, 20W EDSM-15W, 20W
A01	BRAKE DISC ASS'Y	SET								N/A
A02	BRAKE STATOR ASS'Y	SET					N/A			
A03	ROTOR ASS'Y	SET								
A04	MOTOR ASS'Y	SET	CONTACTOR 220/380V							
		SET	VFD 220V							
		SET	VFD 380V							
A4S	STATOR ASS'Y	SET								
A05	GEAR SIDE PLATE ASS'Y	SET								
A06	PLAIN SIDE PLATE ASS'Y	SET								
A08	ELECTRIC EQUIPMENT ASS'Y-CONTACTOR	SET	220/380V							
	ELECTRIC EQUIPMENT ASS'Y-VFD	SET	220V							
	ELECTRIC EQUIPMENT ASS'Y-VFD	SET	380V							
A09	GEARED WHEEL ASS'Y	SET								
A10	PLAIN WHEEL ASS'Y	SET								
A11	POWER CABLE ASS'Y (1.5M)	SET	4.0SQx4C / 6.0SQx4C							
A12	COMBINED CABLE ASS'Y (1.5M)	SET	4.0SQx4C + 1.5SQx8C							
A13	MOTOR CABLE ASS'Y	SET	0.75SQx12C				N/A			
W1T	WEATHER COVER	SET								
004	SNAP RING	EA	S-25 / S-35 / S-45							
005	PLAIN WASHER	EA	46x26.5 / 60x36.5							N/A
006	SNAP RING	EA	R-52 / R-62							
008	GEARED WHEEL	EA								
009	BALL BEARING	EA	6305 / 6307 / 6309ZZ							
010	SNAP RING	EA	R-62 / R-80 / R-105							
011	WRENCH BOLT S/W	EA	M10x20							N/A
012	WRENCH BOLT S/W	EA	M10x30							
013	GUIDE ROLLER BODY	EA								N/A
014	GUIDE ROLLER	EA								N/A
015	GUIDE ROLLER PIN	EA								N/A
018	CORD HOLDER SET	SET								
019	WRENCH BOLT S/W	EA	M10x35 / M10x40							N/A
020	HEX NUT	EA	M5							
028	PLAIN WHEEL	EA								
034	U NUT	EA	M12 / M14							N/A
035	SHAFT	EA								
036A	ADJUSTING COLLAR	EA								N/A
037	WRENCH BOLT	EA	M12x80 / M14x110							N/A
038	COTTER PIN	EA	Ø3x25							N/A
039	STOPPER PIN	EA								N/A
043	BRAKE COVER	EA								N/A
044	BRAKE SPRING	EA	4P							N/A
		EA	6P / 8P					N/A		
045	MOTOR NAME PLATE	EA	CONTACTOR 230/460V							
			VFD 230V 6P							
			VFD 460V 6P							
046	WRENCH BOLT S/W	EA	M6x20							
047	SPRING PIN	EA	Ø6x15							
050	WRENCH BOLT S/W	EA	M8x25							
054	COVER PLUG	EA								N/A
055	TERMINAL BLOCK COVER	EA					N/A			
056	PACKING COVER	EA					N/A			
057	TERMINAL BLOCK	EA	6P 250VAC 20A				N/A			
060	ADJUSTING COLLAR A	EA					N/A			

NO.	DESCRIPTION	UNIT	SIZE	DSM-2.5S	DSM-3S	DSM-3W EDSM-3W	DSM-5W EDSM-5W	DSM-7.5W EDSM-7.5W	DSM-10W EDSM-10W	DSM-15W, 20W EDSM-15W, 20W
061	STAY PIPE	EA		N/A						
062	ADJUSTING COLLAR C	EA		N/A						
063	SPRING WASHER	EA	M48	N/A						
064	HEX NUT	EA	M48	N/A						
071	GEAR CASE	EA								
072	FLANGE	EA								
073	WRENCH BOLT S/W	EA	M8x50							
076	2ND GEAR	EA								
077	SPRING PIN	EA	Ø8x20							
078	3RD GEAR	EA								
079	BALL BEARING	EA	6205ZZ / 6305ZZ							
080	SNAP RING	EA	S25							
081	COLLAR FOR 3RD GEAR	EA								
082	PACKING	EA								
083	WRENCH BOLT S/W	EA	M8x25							
171	SUSPENSION PLATE (OPTION)	EA						N/A		
	CONNECTOR - PARALLEL	EA						N/A		
	CONNECTOR - CROSS MOUNT (OPTION)	EA						N/A		
523	BUMPER RUBBER	EA								N/A
539	BALL BEARING	EA	6202DD							
541	BALL BEARING	EA	6204DD							
591	POWER CABLEB (1m)	M	4.0SQx4C						N/A	
		M	6.0SQx4C			N/A				
592	COMBINED CABLE (1m)	M	4.0SQx4C + 1.5SQx8C							
600	INVERTER (2HP)	EA	200V							
		EA	400V							
604	TERMINAL BLOCK	EA	15P 250VAC 20A							
620	INTERFACE	EA	48V							
		EA	110V							
621	INTERFACE BOARD	EA								
623	PCB SUPPORT BAR	EA	H5xØ4							
640	RECTIFIER	EA	SR-304 3A	N/A						
644	CABLE GLAND	EA	PG13.5							
645	MOTOR CABLE	SET	0.75SQx12C	N/A						
657	MAGNETIC CONTACTOR	EA	MC-12b-48v							
	MAGNETIC CONTACTOR	EA	MC-12b-110v							
658	MACHINE SCREW S/W	EA	M4x12							
660	LIMIT SWITCH BOARD (OPTION)	EA								N/A
661	WRENCH BOLT S/W (OPTION)	EA	M6x20							N/A
662	LIMIT SWITCH (OPTION)	EA	HY-M904							N/A
664	MACHINE SCREW S/W P/W(L)	EA	M4x8							
665	CHANNEL	EA	115mm							
667	CHANNEL STOPPER	EA								
668	MACHINE SCREW S/W P/W(S)	EA	M4x12							
731	CONTROL BOX (CONTACTOR)	EA								
	CONTROL BOX (VFD)	EA								
732	WRENCH BOLT S/W	EA	M8x60							
733	SUPPORT BAR	EA								
742	CONTROL BOX COVER (CONTACTOR)	EA								
	CONTROL BOX COVER (VFD)	EA								
743	CONTROL BOX PACKING	EA								
744	MACHINE SCREW S/W	EA	M5x10							
745	NAME PLATE	EA								

NO.	DESCRIPTION	UNIT	SIZE	DSM-2.5S	DSM-3S	DSM-3W EDSM-3W	DSM-5W EDSM-5W	DSM-7.5W EDSM-7.5W	DSM-10W EDSM-10W	DSM-15W, 20W EDSM-15W, 20W
749	HEX STAY PIN	EA	63mm							
750	PLAIN WASHER	EA	M6							
754	SET SCREW	EA	10x10 / 12x20							N/A
755	RIVET	EA	Ø2.4x8 / Ø3.0x12							
760	BUMPER STOPPER	EA								N/A
761	BUMPER BRACKET (OPTION)	EA								N/A
762	HEX NUT (OPTION)	EA	M10							N/A
763	SPRING WASHER (OPTION)	EA	M10							N/A
764	HEX BOLT S/W (OPTION)	EA	M10x20							N/A

7.5TON, 10TON HOOK MOUNTED HOIST PARTS

NO.	DESCRIPTION	UNIT	SIZE	DSA-7.5W UPTO 6M LIFT	DSA-7.5W ABOVE 6M LIFT	DSA-10W
A01	TOP HOOK BLOCK ASS'Y	SET				
S01	SAFETY LATCH SET	SET				
001	TOP HOOK WITH LATCH	EA				
002	UP TURNING	EA				
003	CHAIN CONTAINER HANGER	SET		N/A		
004	KEY PLATE A	EA				
005	UP LOAD BLOCK PLATE	SET				
006	HOIST CONNECTOR	EA				
007	COLLAR B	EA				
008	NEEDLE BEARING	EA	NA4910			
009	IDLE SHEAVE	EA				
010	COLLAR A	EA				
011	CHAIN GUIDE ROLLER	EA				
012	STAY BOLT A	EA				
013	IDLE SHEAVE PIN	EA				
015	KEY PLATE C	EA				
016	PLAIN WASHER	EA	M16			
017	SPRING WASHER	EA	M16			
018	HEX NUT	EA	M16			
019	HEX BOLT S/W	EA	M10*20			
021	CHAIN GUIDE	EA				N/A
034	STAY BOLT B	EA				
036	COLLAR	EA				
037	HOOK NUT	EA				
038	SPRING PIN	EA	ø8*70			
053	STAY BOLT C	EA				
A21	CHAIN CONTAINER ASS'Y	SET	PCCB/STEEL CHAIN CONTAINER ASS'Y			
A50	TOP HOOK WITH LATCH	SET		N/A		N/A
045	HANGER STAY BOLT A	EA		N/A		
046	HANGER STAY BOLT B	EA		N/A		
047	HEX NUT	EA	M12	N/A		
048	SPRING WASHER	EA	M12	N/A		
049	HEX BOLT	EA	M12*30	N/A		
053	STAY BOLT	EA				
056	CONNECTING STAY BOLT	EA		N/A		N/A
057	STAY COLLAR	EA		N/A		N/A
059	SUPPORT HANGER	EA		N/A		N/A
060	HANGER STAY BOLT C	EA		N/A		N/A
061	HANGER STAY BOLT D	EA		N/A		N/A
A15	BOTTOM HOOK BLOCK ASS'Y	SET				
004	KEY PLATE A	EA				
007	COLLAR B	EA				
008	NEEDLE BEARING	EA	NA4910			
009	IDLE SHEAVE	EA				
010	COLLAR A	EA				
011	CHAIN GUIDE ROLLER	EA				
012	STAY BOLT A	EA				
013	IDLE SHEAVE PIN	EA				
015	KEY PLATE C	EA				
017	SPRING WASHER	EA	M16			

NO.	DESCRIPTION	UNIT	SIZE	DSA-7.5W UPTO 6M LIFT	DSA-7.5W ABOVE 6M LIFT	DSA-10W
018	HEX NUT	EA	M16			
019	HEX BOLT S/W	EA	M10*20			
020	BOTTOM LOAD BLOCK PLATE	SET				
021	CHAIN GUIDE	EA				
S01	SAFETY LATCH SET	SET				
023	BOTTOM TURNING	EA				
024	BOTTOM HOOK WITH LATCH	EA				
037	HOOK NUT	EA				
038	SPRING PIN	EA	ø8*70			
039	CHAIN ANCHORAGE BOLT	EA				N/A
040	U-NUT	EA	M12			N/A
042	STOPPER SPRING PIPE ASS'Y	EA				N/A
043	CHAIN ANCHORAGE METAL	EA				N/A
044	THRUST BEARING	EA	51209			
054	BOTTOM HOOK NAME PLATE	EA				
055	NAME PLATE RIVET	EA	3.2*6			

7.5TON, 10TON TROLLEY MOUNTED HOIST PARTS

NO.	DESCRIPTION	UNIT	SIZE	DSM-7.5W UPTO 6 M LIFT	DSM-7.5W ABOVE 6M LIFT	DSM-10W
A30	CONNECTING BLOCK ASS'Y	SET	DSM			
004	KEY PLATE A	EA				
006	HOIST CONNECTOR	EA				N/A
007	COLLAR B	EA				
008	NEEDLE BEARING	EA	NA4910			
009	IDLE SHEAVE	EA				
010	COLLAR A	EA				
011	CHAIN GUIDE ROLLER	EA				
012	STAY BOLT A	EA				
013	IDLE SHEAVE PIN	EA				
015	KEY PLATE C	EA		N/A		
016	PLAIN WASHER	EA	M16			N/A
017	SPRING WASHER	EA	M16			
018	HEX NUT	EA	M16			
019	HEX BOLT S/W	EA	M10*20			
029	UP LOAD BLOCK PLATE	SET		N/A		
030	CONNECTING PLATE	SET				N/A
		EA		N/A		
033	COLLAR C	EA		N/A		
034	STAY BOLT B	EA				N/A
035	CONNECTOR PIN	EA		N/A		
036	COLLAR	EA				N/A
A21	CHAIN CONTAINER ASS'Y	SET	PCCB/STEEL CHAIN CONTAINER ASS'Y			
028	CHAIN CONTAINER HANGER	SET		N/A		
041	CHAIN GUIDE STOPPER	EA				N/A
045	HANGER STAY BOLT A	EA		N/A		
046	HANGER STAY BOLT B	EA		N/A		
047	HEX NUT	EA	M12			
048	SPRING WASHER	EA	M12			
049	HEX BOLT	EA	M12*30			
051	HEX BOLT S/W	EA	M12x30/M16x30			

15TON, 20TON HOOK MOUNTED HOIST PARTS

NO.	DESCRIPTION	UNIT	SIZE	DSA-15W EDSA-15W	DSA-20W EDSA-20W
A01	TOP HOOK BLOCK ASS'Y	SET			
A21	CHAIN CONTAINER ASS'Y	SET	8m LIFT/ 6m LIFT		
001	SPRING WASHER	EA	M12		
002	HEX NUT	EA	M12		
003	HEX BOLT	EA	M12*30		
004	CHAIN CONTAINER HANGER	SET			
005	HEX NUT	EA	M16		
006	SPRING WASHER	EA	M16		
007	HEX BOLT	EA	M16*100		
009	IDLE SHEAVE PIN	EA	Ø50*204/Ø50*249		
010	KEY PLATE (A)	EA			
011	HEX WRENCH BOLT	EA	M12*25		
012	SPRING WASHER		M12		
013	HEX NUT	EA	M18/M22		
014	SPRING WASHER	EA	M18/M22		
015	KEY PLATE (B)	EA			
016	SPRING PIN	EA	Ø12*50		
017	SUPPORT RING	EA			
019	UP TURNING	EA			
S01	SAFETY LATCH SET	SET			
023	TOP HOOK WITH LATCH	EA			
025	HOOK NUT	EA			
026	GUIDE COLLAR (D)	EA			N/A
027	UP LOAD BLOCK PLATE	SET			
028	GUIDE COLLAR (B)	EA			
029	NEEDLE BEARING	EA	NA4910		
030	IDLE SHEAVE	EA			
031	STAY BOLT (K)	EA			
032	CHAIN GUIDE ROLLER (B)	EA			
033	CHAIN GUIDE ROLLER (C)	EA			N/A
034	GUIDE COLLAR (A)	EA			
035	STAY BOLT	EA			
036	STAY BOLT (M)	EA			

NO.	DESCRIPTION	UNIT	SIZE	DSA-15W EDSA-15W	DSA-20W EDSA-20W
A15	BOTTOM HOOK BLOCK ASS'Y				
001	KEY PLATE (B)	EA			
002	SPRING WASHER	EA	M12		
003	HEX WRENCH BOLT	EA	M12*25		
004	BOTTOM HOOK NAME PLATE	EA			
005	NAME PLATE RIVET	EA			
006	HEX NUT	EA	M24/M27		
007	SPRING WASHER	EA	M24/M27		
008	KEY PLATE (A)	EA			
009	SPRING WASHER	EA	M18		
010	HEX NUT	EA	M18		
011	BOTTOM LOAD BLOCK PLATE	SET			
012	STAY PIPE (E)	EA	133 / 185mm		
013	HEX NUT	EA	M12		
014	SPRING WASHER	EA	M12		
015	STAY PIPE (D)	EA			
016	IDLE SHEAVE PIN	EA	281 / 341mm		
017	SUB SIDE PLATE	EA			
018	BOLT(R.B)	EA	120 / 124mm		
019	STAY BOLT (H)	EA	286 / 346mm		
020	STAY BOLT (J)	EA	284 / 342mm		
021	STAY BOLT (I)	EA	122 / 125mm		
022	CHAIN GUIDE (C)	EA			
023	STAY BOLT (G)	EA	300 / 368mm		
024	HOOK NUT	EA			
025	SPRING PIN	EA	Φ2 * 50		
026	BEARING CASE	EA			
027	THRUST BEARING	EA	51312 / 51313		
A28	STOPPER SPRING PIPE ASS'Y	SET			
S01	SAFETY LATCH SET	SET			
033	BOTTOM HOOK WITH LATCH	EA			
035	BOTTOM TURNING	EA	200 / 254mm		
036	CHAIN GUIDE ROLLER (B)	EA			
037	GUIDE COLLAR (A)	EA			
038	IDLE SHEAVE	EA			
039	NEEDLE BEARING	EA	NA4910		
040	GUIDE COLLAR (B)	EA			
041	IDLE SHEAVE PIN (F)	EA			

15TON, 20TON TROLLEY MOUNTED HOIST PARTS

NO.	DESCRIPTION	UNIT	SIZE	DSM-15W EDSM-15W	DSM-20W EDSM-20W
A30	CONNECTING BLOCK ASS'Y	SET			
A21	CHAIN CONTAINER ASS'Y -SCC10	SET	8m LIFT / 6m LIFT		
001	SPRING WASHER	EA	M12		
002	HEX NUT	EA	M12		
003	HEX BOLT	EA	M12*30		
004	CHAIN CONTAINER HANGER	SET	DSM		
005	HEX NUT	EA	M16		
006	SPRING WASHER	EA	M16		
007	HEX BOLT	EA	M16*170		
008	CHAIN CONTAINER SUPPORT PIN SET	EA			
009	SPRING WASHER	EA	M18		
010	HEX NUT	EA	M18		
011	KEY PLATE (A)	EA			
012	HEX WRENCH BOLT	EA	M12*20		
013	SPRING WASHER	EA	M12		
014	HEX NUT	EA	M20		
015	SPRING WASHER	EA	M20		
016	CONNECTING PLATE	SET			
017	GUIDE COLLAR (A)	EA			
018	CHAIN GUIDE ROLLER (B)	EA			
019	GUIDE COLLAR (E)	EA			
020	STAY BOLT (L)	EA	216 / 269mm		
021	STAY BOLT (O)	EA	211 / 265mm		
022	GUIDE COLLAR (B)	EA			
023	IDLE SHEAVE	EA			
024	NEEDLE BEARING	EA	4910		
025	GUIDE COLLAR (D)	EA			
026	IDLE SHEAVE PIN (E)	EA	208 / 261 mm		
027	STAY BOLT (M)	EA			

PARTS OF LOW HEADROOM HOIST (LOAD BLOCK)

NO.	DESCRIPTION	UNIT	SIZE	DSHM-3W EDSHM-3W	DSHM-5W EDSHM-5W
A01	CAM LIMIT SWITCH ASS'Y	SET			
A02	LIMIT CAM PLATE ASS'Y	SET			
L01	SIDE PLATE	EA			
L02	IDLE SHEAVE	EA			
L03	GUIDE COLLAR A	EA			
L04	GUIDE ROLLER	EA			
L05	GUIDE COLLAR B	EA			
L07	LIMIT SIDE PLATE	EA			
L08	STAY BOLT	EA			
L13	CONNECTING BOLT	EA	M16X95 / M16X100		
L14	SPRING WASHER	EA	M10		
L15	METAL COLLAR	EA			
L16	SPRING WASHER	EA	M16		
L17	CHAIN ANCHORAGE METAL	EA			
L18	CHAIN ANCHORAGE BOLT SET	EA	M10*47 / M12*54		
L20	CHAIN GUIDE	EA			
L21	HEX NUT	EA	M16		
L22	BALL BEARING	EA	6010ZN		
L23	HEX NUT	EA	M10		
L24	CONNECTOR	EA			
L26	OPERATING PLATE	EA			
L27	OPERATING HEX SHAFT	EA			
L28	SPRING PIN	EA			
L29	ROLLER COLLAR	EA			
L30	LIMIT SWITCH CAP	EA			
L31	LIMIT CAM BOLT	EA			
L32	BUSH	EA			
L33	HEX BOLT S/W	EA	M6x10		
L35	CABLE ROCKER	EA			
L36	STOPPER COLLAR	EA			
L37	STOPPER SPRING	EA			

PARTS OF LUG MOUNT TROLLEY KIT

NO.	DESCRIPTION	UNIT	SIZE	PTK-1	PKT-2	PTK-3	PTK-4
T05	PLAIN SIDE PLATE ASS'Y A	SET					
T06	PLAIN SIDE PLATE ASS'Y B	SET					
A10	PLAIN WHEEL ASS'Y	SET					
004	SNAP RING	EA	S17, S25(2,3T), S35				
005	PLAIN WASHER	EA	32*18/40*26.5/ 46*26.5/60*36.5				
009	BALL BEARING	EA	6203/6205/6305/6307ZZ				
010	SNAP RING	EA	R40, R52, R62, R80				
011	WRENCH BOLT S/W	EA	M10*20				
013	GUIDE ROLLER BODY	EA					
014	GUIDE ROLLER	EA					
015	GUIDE ROLLER PIN	EA					
028	PLAIN ROLLER	EA					
034	U-NUT	EA	M10, M12, M14				
035	SHAFT	EA					
036A	ADJUSTING COLLAR	EA					
037	WRENCH BOLT	EA	M10*70/M10*80/ M12*90/M14*120				
038	COTTER PIN	EA	ø3x25 / ø4x40				
039	STOPPER PIN	EA					
171	SUSPENSION PLATE	EA					
	CONNECTOR - PARALLEL	EA					
	CONNECTOR - CROSS MOUNT	EA					
754	SET SCREW	EA	8*10/8*15/ 10*10/12*20				

PARTS OF TWIN HOOK (DSDH 1~5TON)

NO.	DESCRIPTION	QT'Y	SIZE	DSDH-1S	DSDH-2W	DSDH-1.5S	DSDH-3W	DSDH-2S	DSDH-5W
	ASSEMBLY PART								
A02	GEAR SIDE PLATE	SET							
A03	MOTOR SIDE PLATE	SET							
A04	LIMIT CAM PLATE ASS'Y	SET							
A05	1ST GAER ASS'Y	SET							
A06	LIMIT SWITCH ASS'Y	SET							
	BODY PART								
B01	CHAIN CONTAINER SUPPORT METAL	EA							
B02	CLAMPING PLATE	EA							
B03	HOLDING BOARD FOR SPRING	EA							
B05	BALL BEARING	EA	6910ZZ/6913ZZ						
B06	STAY BOLT (B)	EA							
B07	JOINT PIPE (B)	EA							
B08	STAY PIPE (B)	EA							
B09	ANTIROTATION PIN	EA							
B10	O RING	EA	P36			N/A			
B11	LOAD SHEAVE (B)	EA							
B12	STAY BOLT (C)	EA		N/A					
B13	CHAIN CONTAINER SUPPORT PIN	EA							
B14	HEX NUT	EA	M10						
B15	TOP HOOK PIN	EA							
B16	1ST GEAR	EA							
B17	LOAD SHEAVE (B)	EA							
B18	STAY PIPE (B)	EA							
B19	CHAIN GUIDE (B)	EA							
B20	BEARING HOUSING (B)	EA							
B21	STAY BOLT (A)	EA							
B22	CONNECTING PLATE	EA							
B23	HEX BOLT	EA	M10x25 / M12x35						
B24	SPRING WASHER	EA	M10 / M12						
B25	HEX BOLT	EA	M10x75/M10x95						
B26	IDLE SHEAVE PIN (B)	EA							
B27	IDLE SHEAVE	EA							
B28	BALL BEARING	EA	6204ZZ/6206ZZ/6208ZZ						
B29	COLLAR (A)	EA							
B30	COLLAR (G)	EA							
B31	CHAIN GUIDE PLATE	EA							
B32	COLLAR E	EA							
	ARM BLOCK PART								
D01	ARM BLOCK ASS'Y	SET		DSDH-1S	DSDH-2W	DSDH-1.5S	DSDH-3W	DSDH-2S	DSDH-5W
F01	STAY PIN (C)	EA							
F02	COLLAR (I)	EA							
F03	COLLAR (F)	EA							
F04	HEX NUT	EA	M10						
F05	RIVET	EA	3x8						
F06	COVER PLATE	EA							

NO.	DESCRIPTION	QT'Y	SIZE	DSDH-1S	DSDH-2W	DSDH-1.5S	DSDH-3W	DSDH-2S	DSDH-5W
F07	FIXATION PLATE	EA							
F08	EYE BOLT	EA	M8						
F09	ARM PLATE (A)	EA							
F10	RUBBER	EA							
F11	STAY BOLT (F)	EA							
F12	BALANCE WEIGHT	EA							
F13	HEX NUT	EA	M12						
F14	SPRING WASHER	EA	M12						
F16	IDLE SHEAVE PIN (B)	EA							
F17	IDLE SHEAVE	EA							
F18	BALL BEARING	EA	6204ZZ/6206ZZ/6208ZZ						
F19	COLLAR (A)	EA							
F20	ARM PLATE (D)	EA							
F21	CONNECTING BOLT (A)	EA							
F22	LIMIT SWITCH COVER	EA							
F23	RETURN SPRING	EA							
F24	LIMIT SWITCH	EA							
F25	HEX BOLT S/W	EA	M6x10						
F26	LIMIT SWITCH CAP	EA							
F27	CABLE GLAND	EA							
F28	PLAIN WASHER	EA	M12/M16/M24						
F32	CABLE	EA							
F33	LIMIT SWITCH BOARD	EA							
F34	CAM COVER	EA							
F35	JOINT PIPE	EA							
F36	SNAP RING	EA	E14						
F37	CAM JOINT PIPE	EA							
F38	STAY BOLT (ARM)	EA							
F39	CHAIN GUIDE (A)	EA							
F40	BOTTOM HOOK WIGHT	EA			N/A		N/A		N/A
F41	LIMIT CAM PLATE	EA							
F42	BUSH (B)	EA							
F43	COLLAR (H)	EA							
F44	SPRING PIN	EA	Φ3x30						
F45	OPERATING HEX SHAFT	EA							
F46	OPERATING PLATE	EA							
F47	GUIDE ROLLER (B)	EA							
F48	COLLAR (D)	EA							
F49	COLLAR (C)	EA							
F50	HEX BOLT	EA	M10x75/M10x95						
F51	ARM PLATE (C)	EA							
F52	SPRING WASHER	EA							
F53	SPRING WASHER (PLAIN WASHER)	EA	M12/PW16/M16						N/A
F54	HEX NUT (U NUT)	EA	M12/U16/M16/U24						
F55	HEX BOLT	EA	M10x25						
F56	STAY BOLT (E)	EA							

NO.	DESCRIPTION	QT'Y	SIZE	DSDH-1S	DSDH-2W	DSDH-1.5S	DSDH-3W	DSDH-2S	DSDH-5W
F58	SPRING WASHER	EA	M12						
F59	HEX NUT	EA	M12						
F60	IDLE SHEAVE PIN (C)	EA							
F61	STRIP GUIDE	EA							
F62	ROLLER PIN	EA							
F63	CHAIN GUIDE ROLLER (A)	EA							
F64	BALL BEARING	EA	6003ZZ/6004ZZ						
F67	HEIGHT ADJUSTMENT BOLT	EA							
F69	U NUT	EA	M8/M10/M12						
F70	STOPPER COLLAR	EA		N/A		N/A		N/A	
F71	CHAIN ANCHORAGE BOLT	EA							
F73	HEX NUT	EA	M14/M20						
F74	STOPPER PLATE	EA		N/A		N/A		N/A	
F75	TURNING	EA		N/A		N/A		N/A	
F76	HEX BOLT	EA	M10x25	N/A		N/A		N/A	
F77	PLAIN WASHER	EA	M14/M20/M20	N/A		N/A		N/A	
F78	SPRING WASHER	EA			N/A		N/A		N/A
F79	CHAIN ANCHORAGE METAL	EA			N/A		N/A		N/A
F80	STOPPER SPRING	EA			N/A		N/A		N/A
F81	HEX BOLT	EA	M12x45	N/A		N/A		N/A	
F82	HEX NUT	EA	M12	N/A		N/A		N/A	
F83	HEX BOLT	EA	M10x35	N/A		N/A		N/A	
F84	SPRING WASHER	EA	M10	N/A		N/A		N/A	

PARTS OF ULTRALOW HEADROOM CHAIN HOIST

NO	PART NAME	QT'Y	SIZE	3W	5W	REMARK
L01	SIDE PLATE	1				
L02	IDLE SHEAVE	2				
L03	CHAIN GUIDE COLLAR(OUT)	4				
L04	GUIDE ROLLER	4				
L05	CHAIN GUIDE COLLAR(IN)	2				
L06	LIMIT CAM PLATE	2				
L07	LIMIT SIDE PLATE	1				
L08	STAY BOLT	7				
L09	CHAIN GUIDE (A)	1				
L14	SPRING WASHER	15	M10			
L15	SUB STAY A	1				
L16	SUB ADJUSTING COLLAR	8				
L17	CHAIN ANCHORAGE MATAL	1				
L20	CHAIN GUIDE (B)	2				
L22	BALL BEARING	4	6010DN			
L23	HEX NUT	15	M10			
L24	CONNECTOR	1				
L26	OPERATING PLATE	2				
L27	OPERATING HEX SHAFT	1				
L28	SPRING PIN	2	3x20			
L29	ROLLER COLLAR	2				
L30	LIMIT SWITCH CAP	1				
L31	HEX BOLT	1	M10x90			
L32	BUSH	1				
L33	HEX BOLT S/W	6	M6x10			
L35	CABLE GLAND	1	PG13.5			
L40	SUB STAY BOLT A	1				
L41	ADJUSTING COLLAR	12				
L42	SUPPORT COLLAR	3				
L43	SPRING WASHER	6	M36			
L44	HEX NUT	6	M36			
L45	SHAFT	3				
L46	FRAME STAY BOLT A	6				
L47	STAY PIPE A	1				
L48	STAY PIPE C	1				
L49	GAER SIDE PLATE	1				
L50	BALANCE WEIGHT A	1				

NO	PART NAME	QT'Y	SIZE	3W	5W	REMARK
L51	BALANCE WEIGHT B	2				
L52	HEX NUT	8	M24			
L53	SPRING WASHER	8	M24			
L54	WEIGHT STAY BOLT	4				
L55	PLAIN SIDE PLATE	1				
L56	HEX NUT	12	M24			
L57	SPRING WASHER	12	M24			
L58	PLAIN WASHER	12	M24			
L59	STAY PIPE B	6				
L60	BRACKET COLLAR	6				
L72	BALANCE WEIGHT C	4				
L73	LOAD PIN	1				
L74	PLAIN WASHER	8	M24			
L75	PLAIN WASHER	4	M24			
L76	SPRING WASHER	4	M24			
L77	HEX NUT	4	M24			
004	SNAP RING	6	S35			
005	PLAIN WASHER	6				
011	WRENCH BOLT S/W	8	M10x20			
013	GUIDE ROLLER BODY	4				
014	GUIDE ROLLER	4				
015	GUIDE ROLLER PIN	4				
105	TOP HOOK PIN	1				
107	U-NUT	1	M16			
108	PLAIN WASHER	1	M16			
023	ROLLER PIN	6				
732	WRENCH BOLT S/W	4	M8x60			
733	SUPPORT BAR	4				
S12	CHAIN ANCHORAGE BOLT SET	1				
A01	LIMIT SWITCH ASS'Y	1				
A02	LIMIT CAM PLATE ASS'Y	1				
A05	GEAR SIDE PLATE ASS'Y	1				
A06	PLAIN SIDE PLATE ASS'Y	1				
A09	GEAR ROLLER ASS'Y	2				
A10	PLAIN ROLLER ASS'Y	4				

NO	PART NAME	QT'Y	SIZE	3W	5W	REMARK
D01	GEARED MOTOR ASS'Y	1				
D02	ELECTRIC EQUIPMENT ASS'Y	1				
D03	HOIST BODY ASS'Y	1	DSA-2,5S			
H01	IDLE SHEAVE	2	DSA-5W			
H02	BALL BEARING	4	6208ZZ			
H07	SHEAVE PIN	2				
H08	SAFETY LATCH SET	1				
H09	BOTTOM HOOK	1				
H10	STOPPER SPRING	2				
H11	KEY PLATE	4	DSA-7.5T			
H12	HEX BOLT S/W	8	M10x20			
H13	PLAIN WASHER	2	M42			
H14	TURNING SHAFT	1				
H15	SHEAVE GUIDE	2				
H16	SUPPORT COLLAR	1				
H17	THRUST BEARING	1	51207			
H18	BOTTOM SPLIT RING	2				
H19	BEARING COVER	1				
H20	SNAP RING	1	R72			
H21	ADJUSTING COLLAR B	4				
H22	SPRING WASHER	2	M42			
H23	HEX NUT	2	M42			
H25	SUPPORT BAR	2				
H26	STAY BOLT	1				
H27	HEX NUT	2	M10			
H28	SPRING WASHER	2	M10			

11. Electric Wiring Diagram

Electric Wiring Diagram of Hook Suspension Serie

DSA-1S, DSA-2W

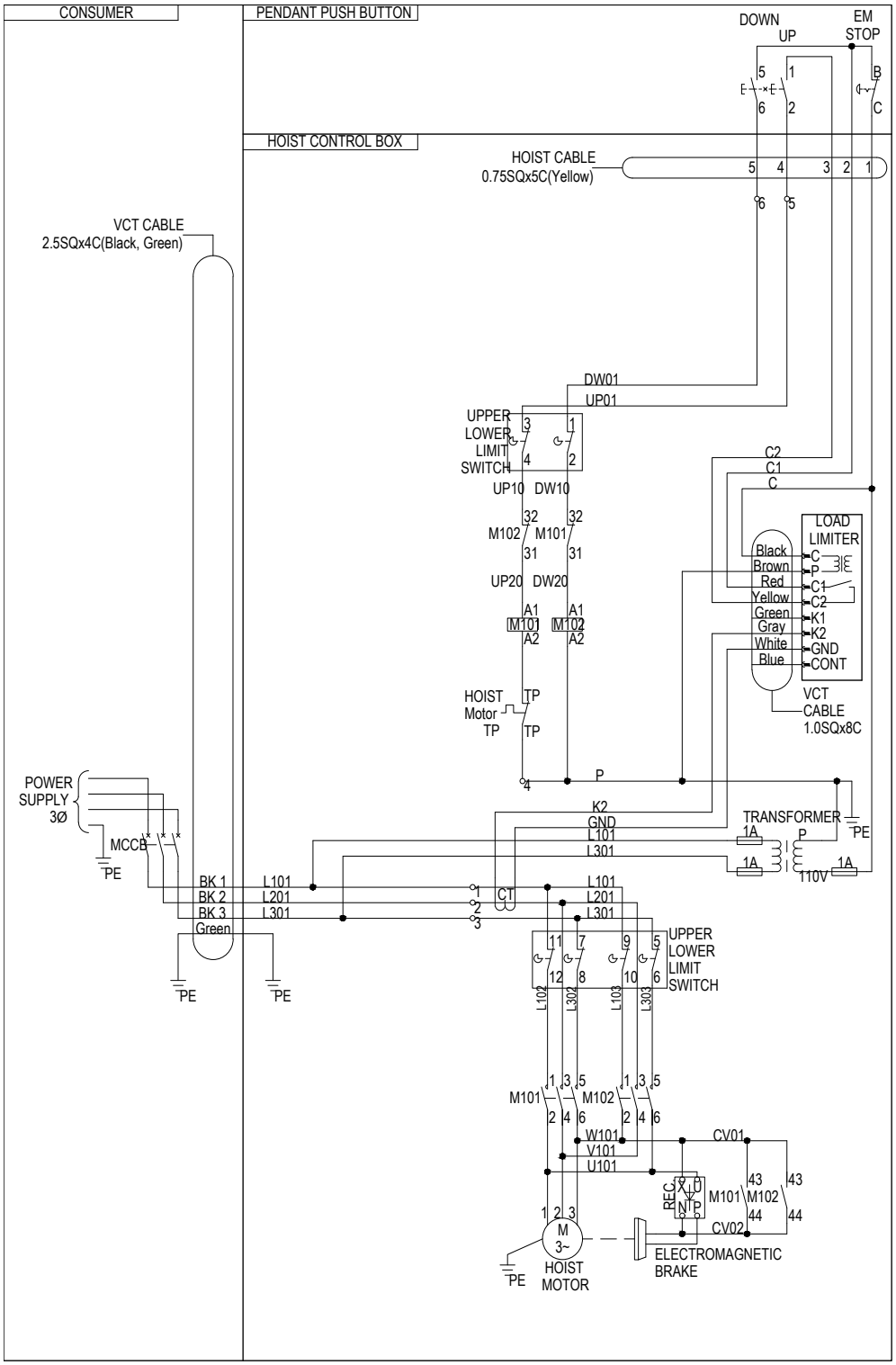

Electric Wiring Diagram of Motorized Trolley

DSM-1S, DSM-2W

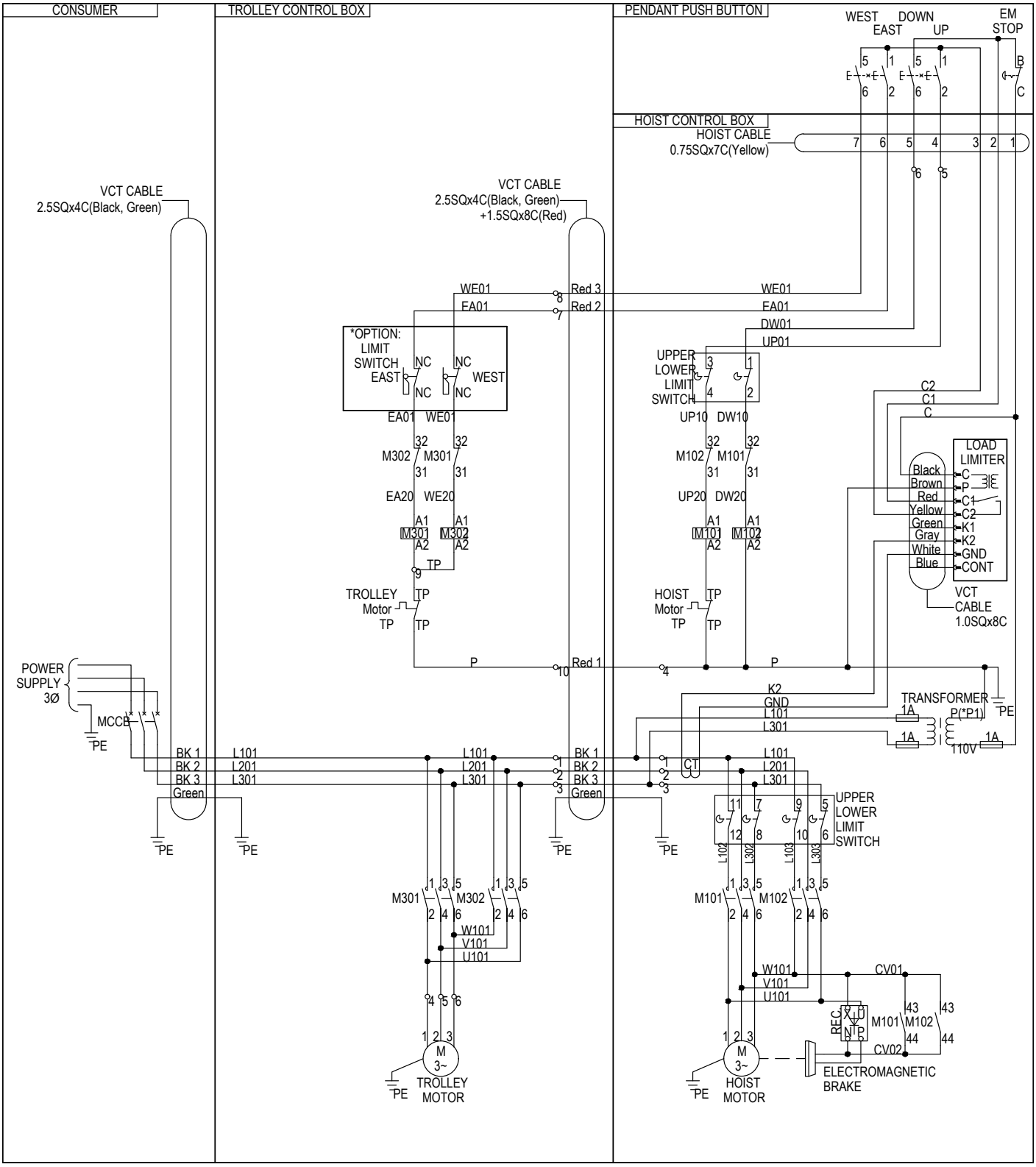

Electric Wiring Diagram of Hook Suspension Series

EDSA-1S, EDSA-2W

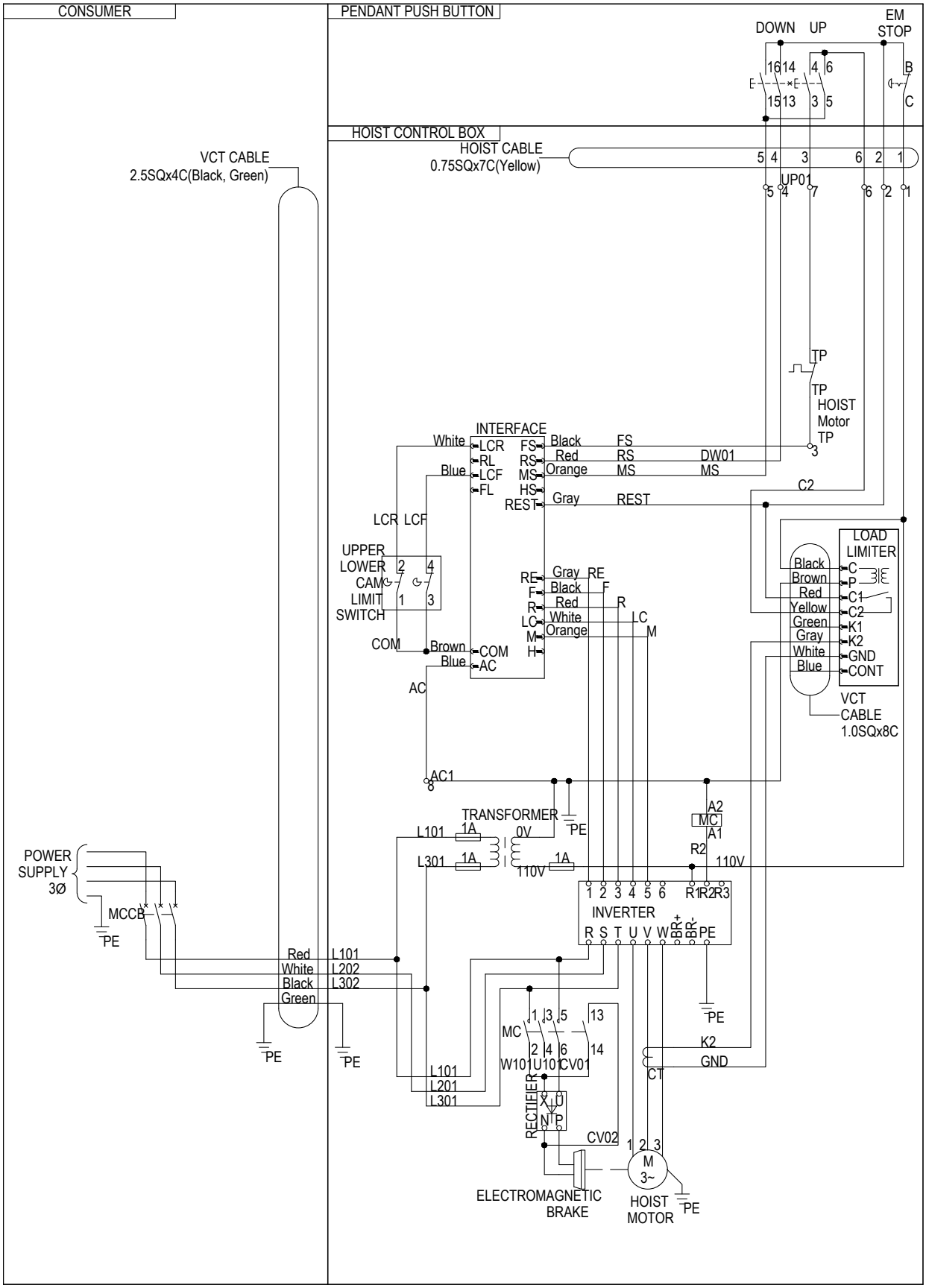

Electric Wiring Diagram of Motorized Trolley

EDSM-1S, EDSM-2W

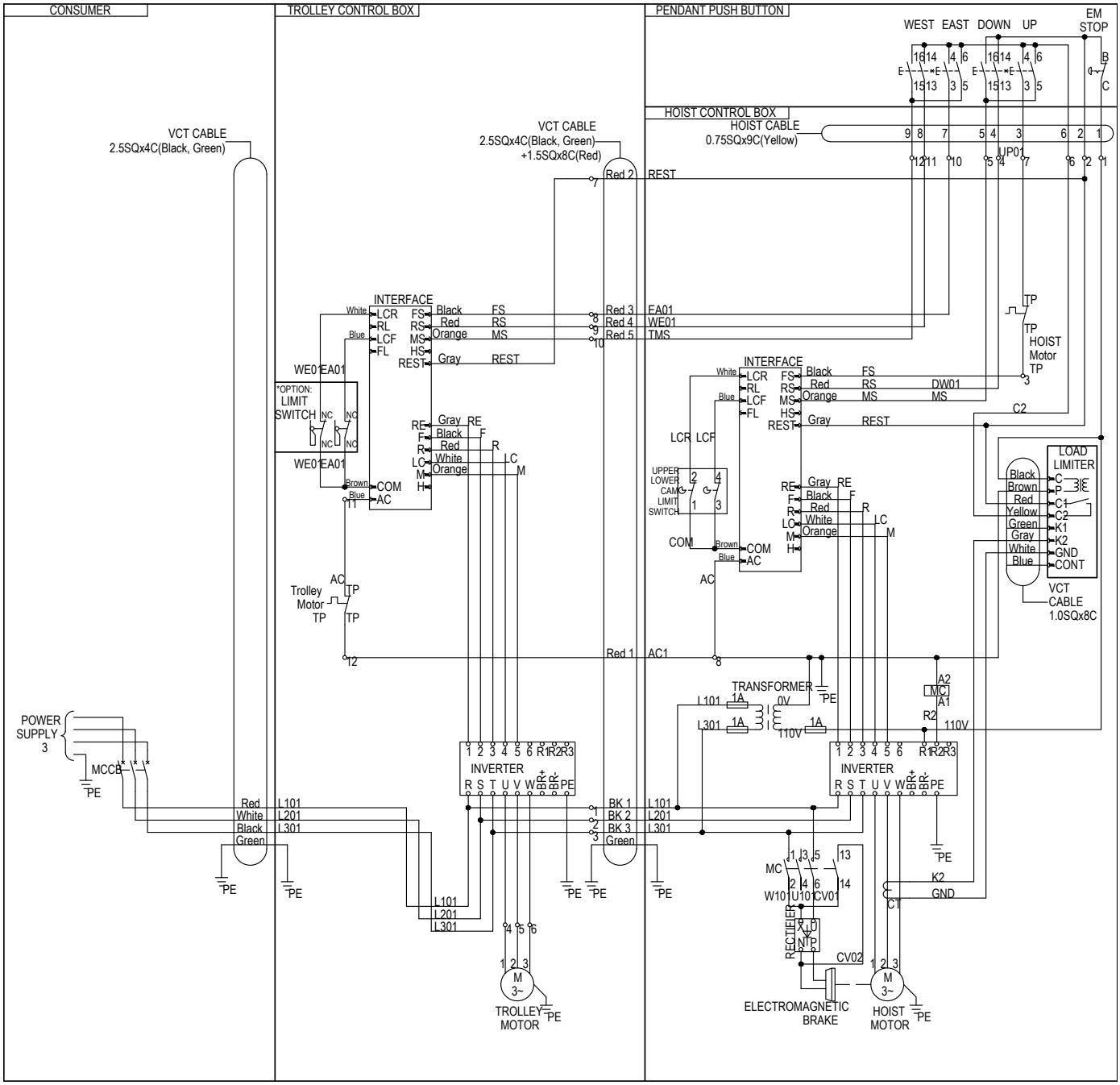

Electric Wiring Diagram of Hook Suspension Series

DSA-1.5S, DSA-2S, DSA-2.5S, DSA-3S, DSA-3W, DSA-5W, DSA-7.5W

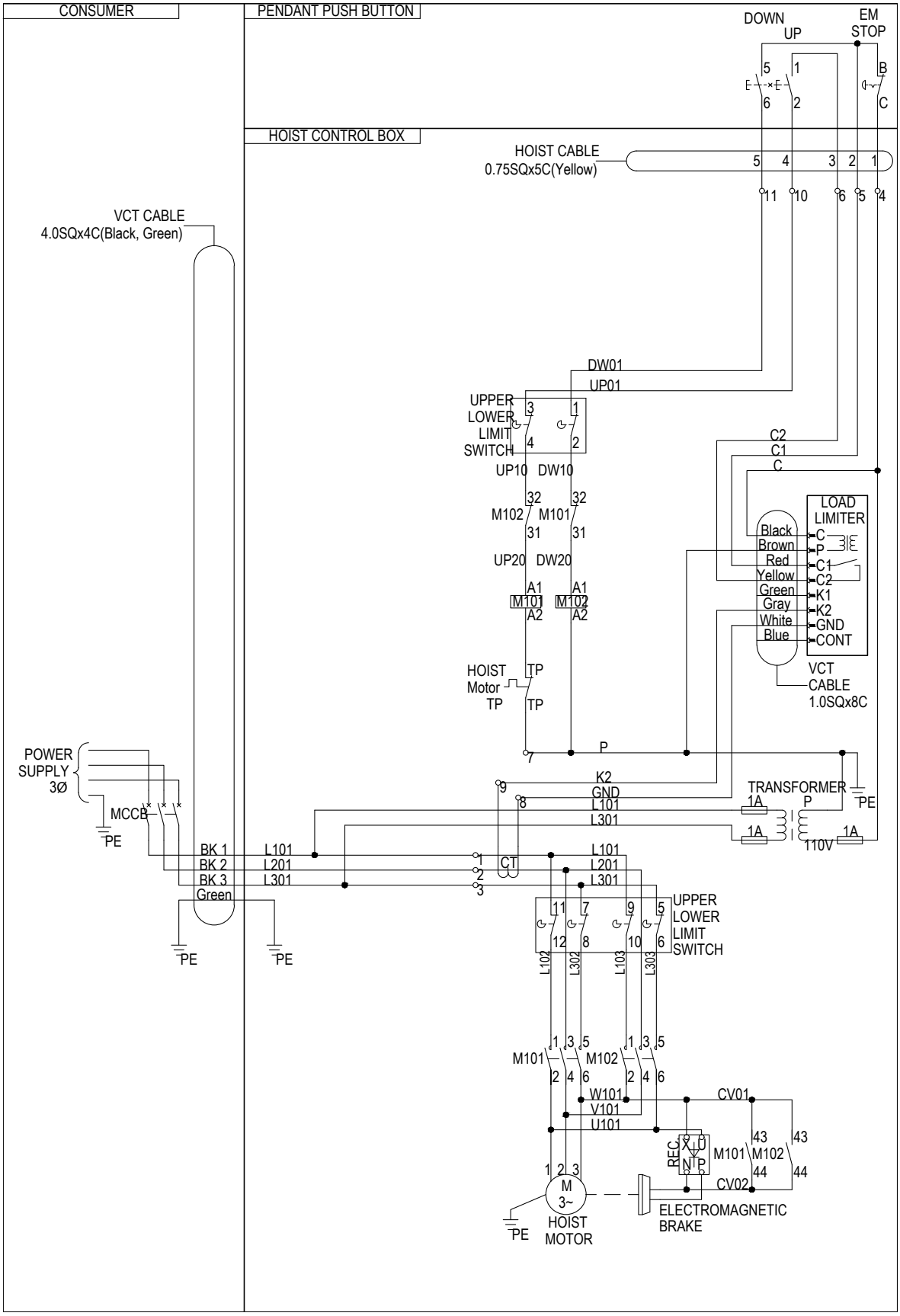

Electric Wiring Diagram of Motorized Trolley

DSM-1.5S, DSM-2S, DSM-2.5S, DSM-3S, DSM-3W, DSM-5W

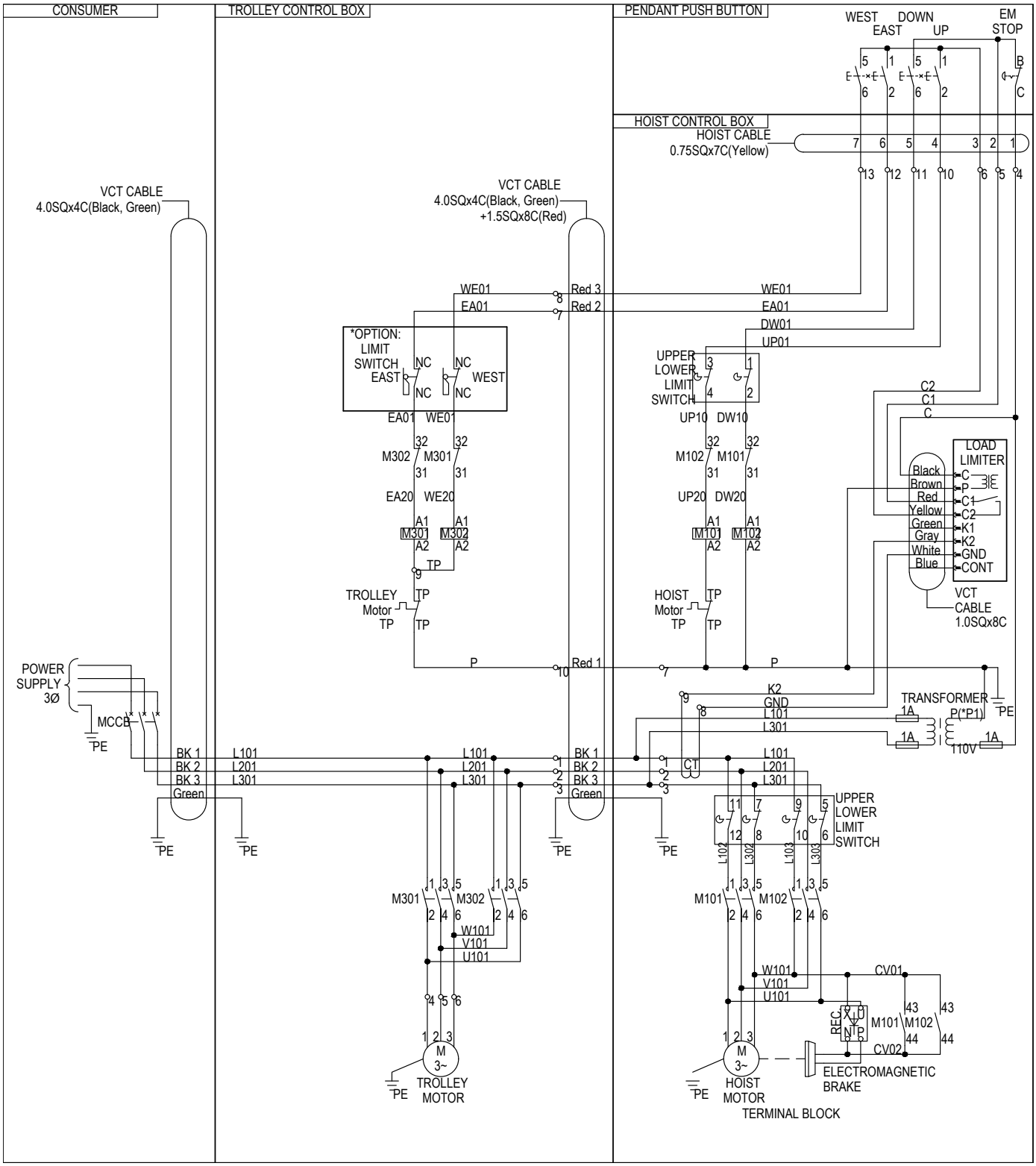

Electric Wiring Diagram of Motorized Trolley

DSM-7.5W

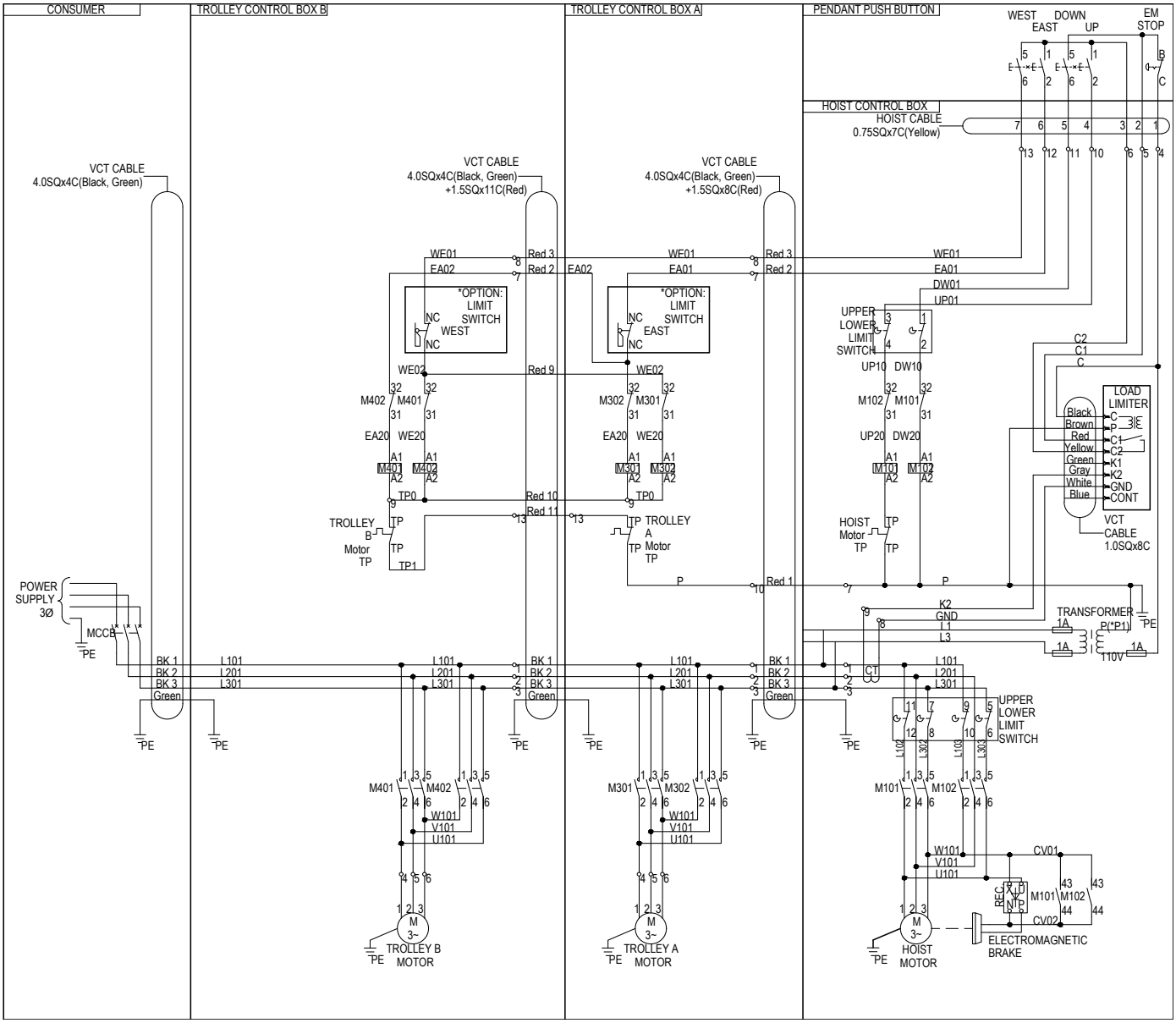

Electric Wiring Diagram of Hook Suspension Series

EDSA-1.5S, EDSA-2S, EDSA-2.5S, EDSA-3S, EDSA-3W, EDSA-5W, EDSA-7.5W

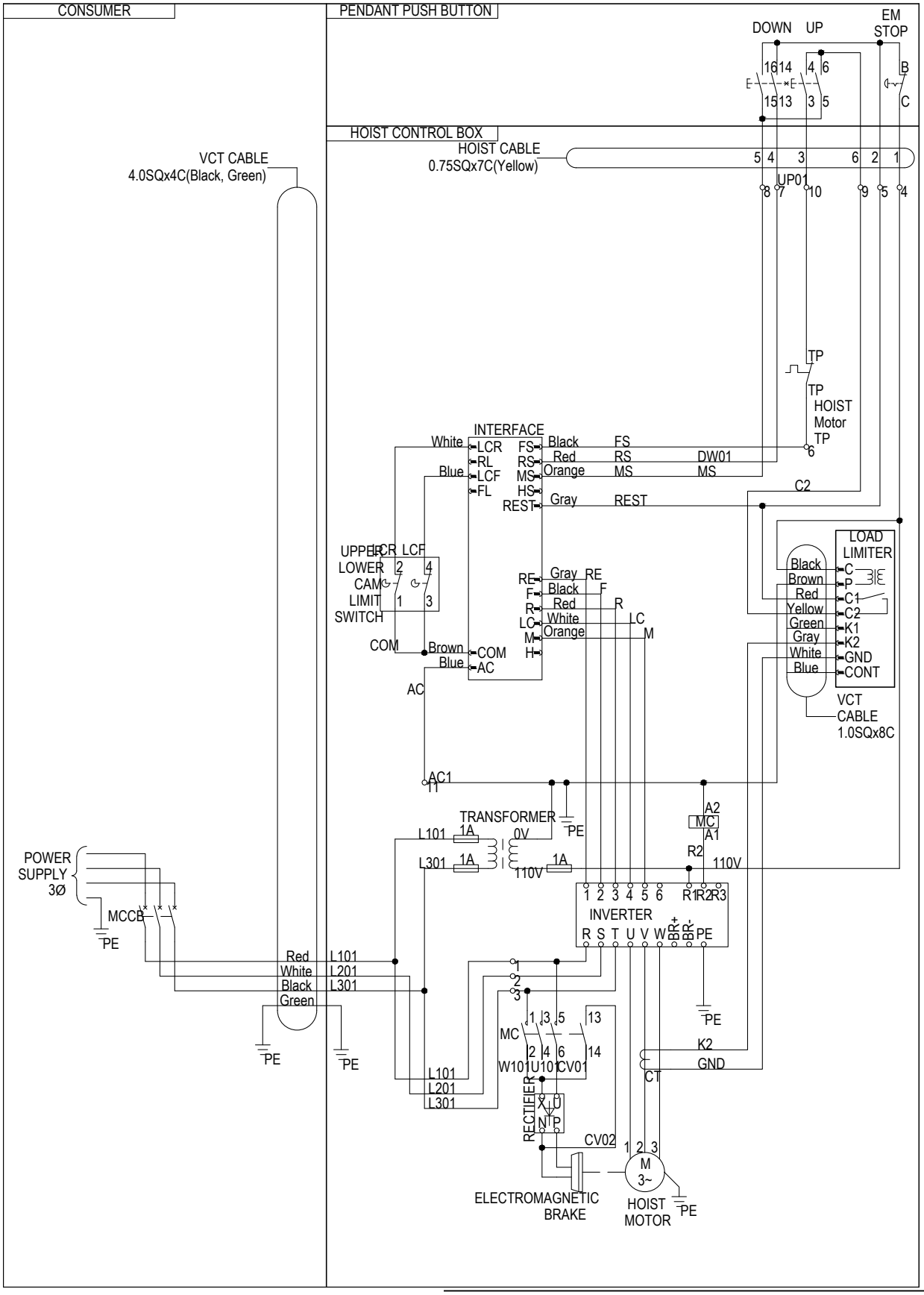

Electric Wiring Diagram of Motorized Trolley

EDSM-1.5S, EDSM-2S, EDSM-2.5S, EDSM-3S, EDSM-3W, EDSM-5W

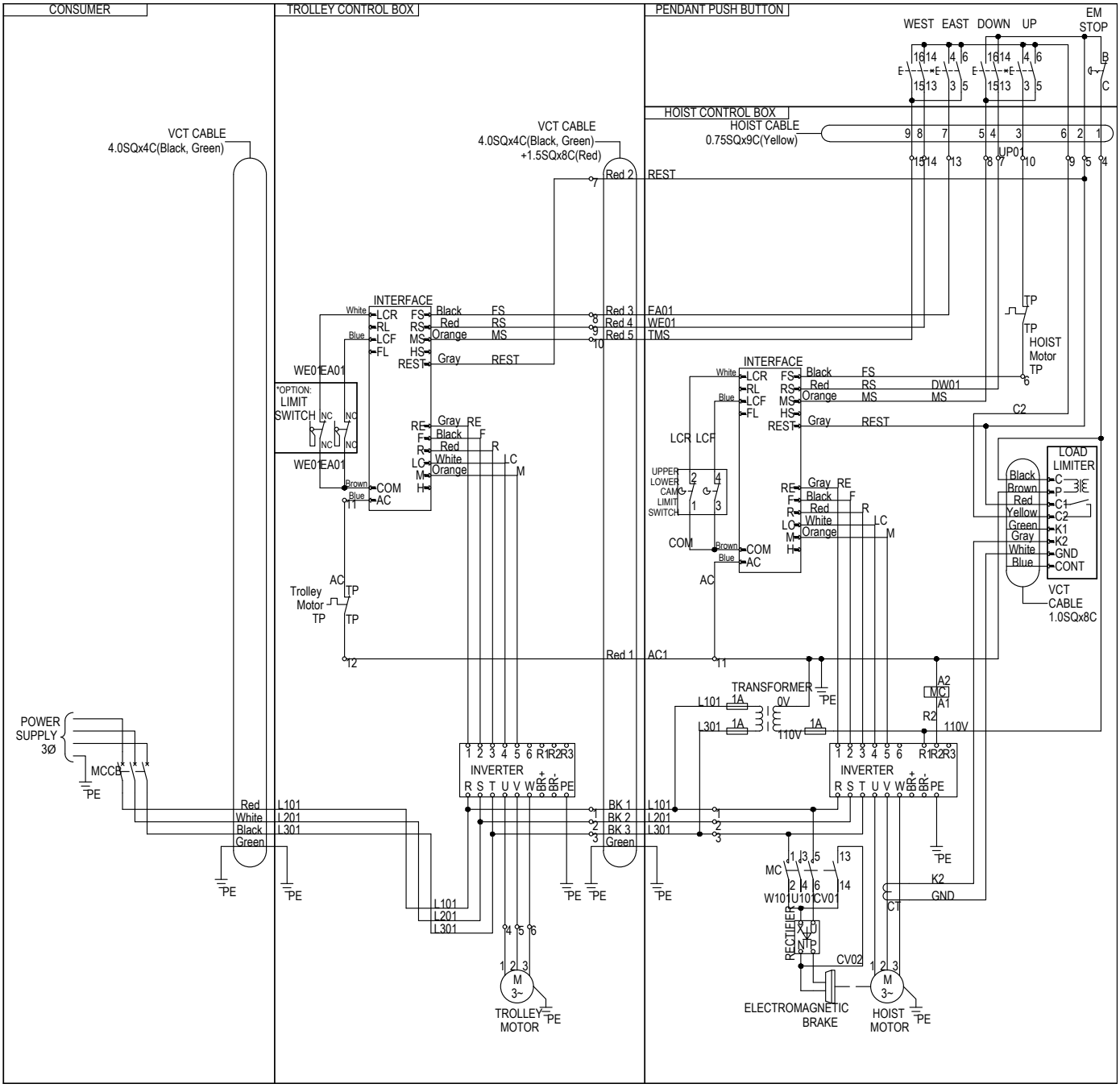

Electric Wiring Diagram of Motorized Trolley

EDSM-7.5W

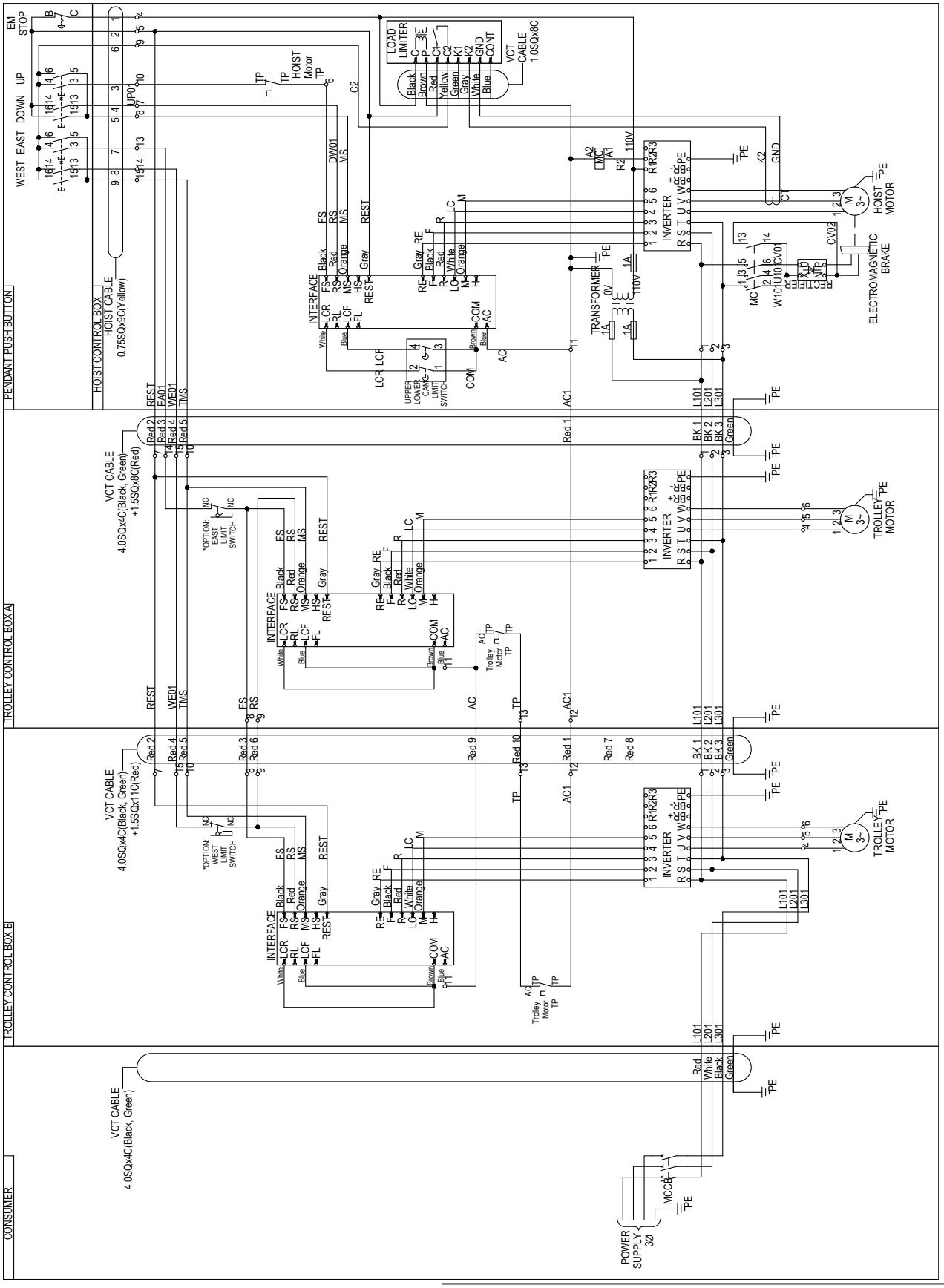

Electric Wiring Diagram of Hook Suspension Series

DSA-10W

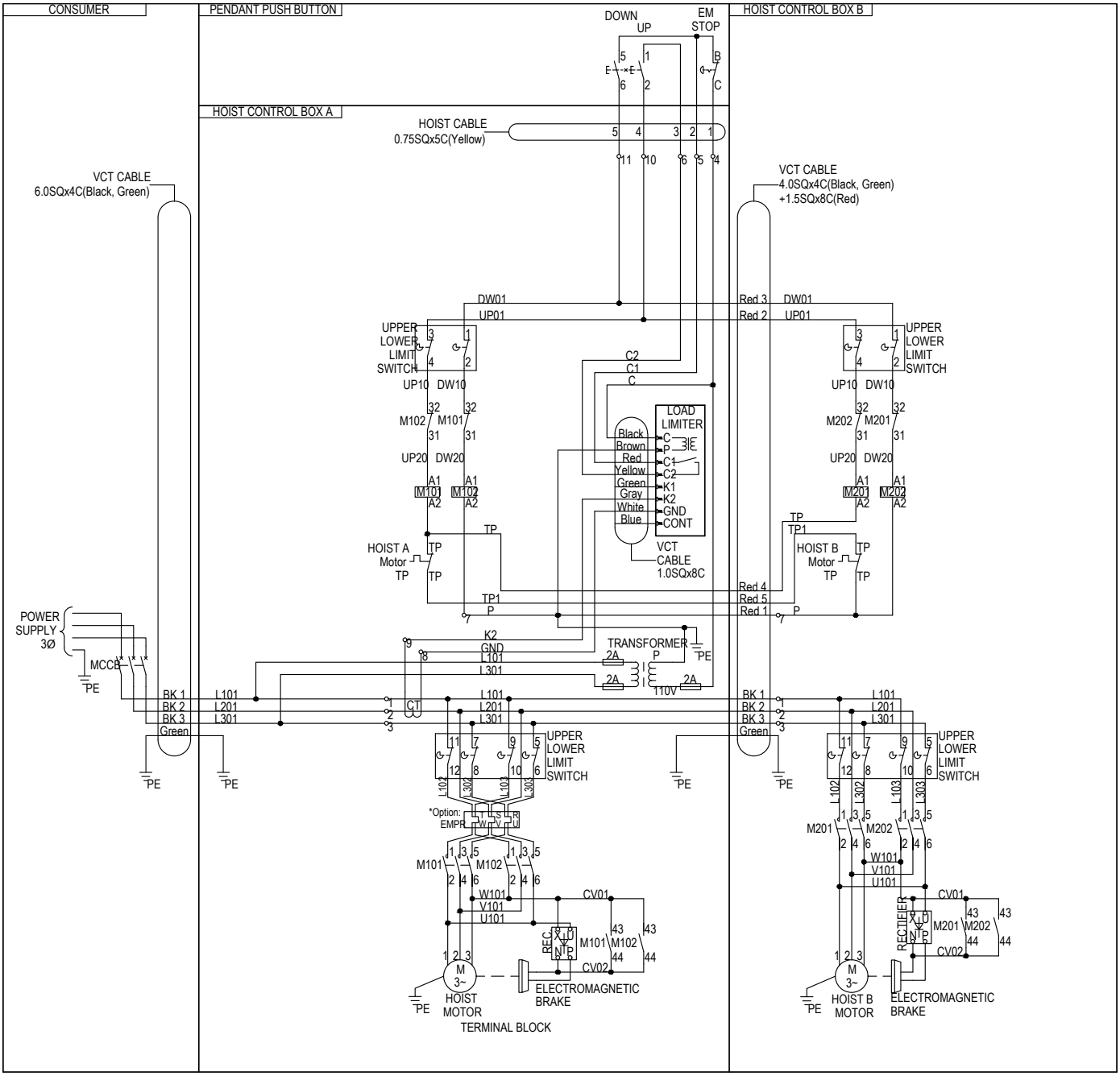

Electric Wiring Diagram of Motorized Trolley

DSM-10W

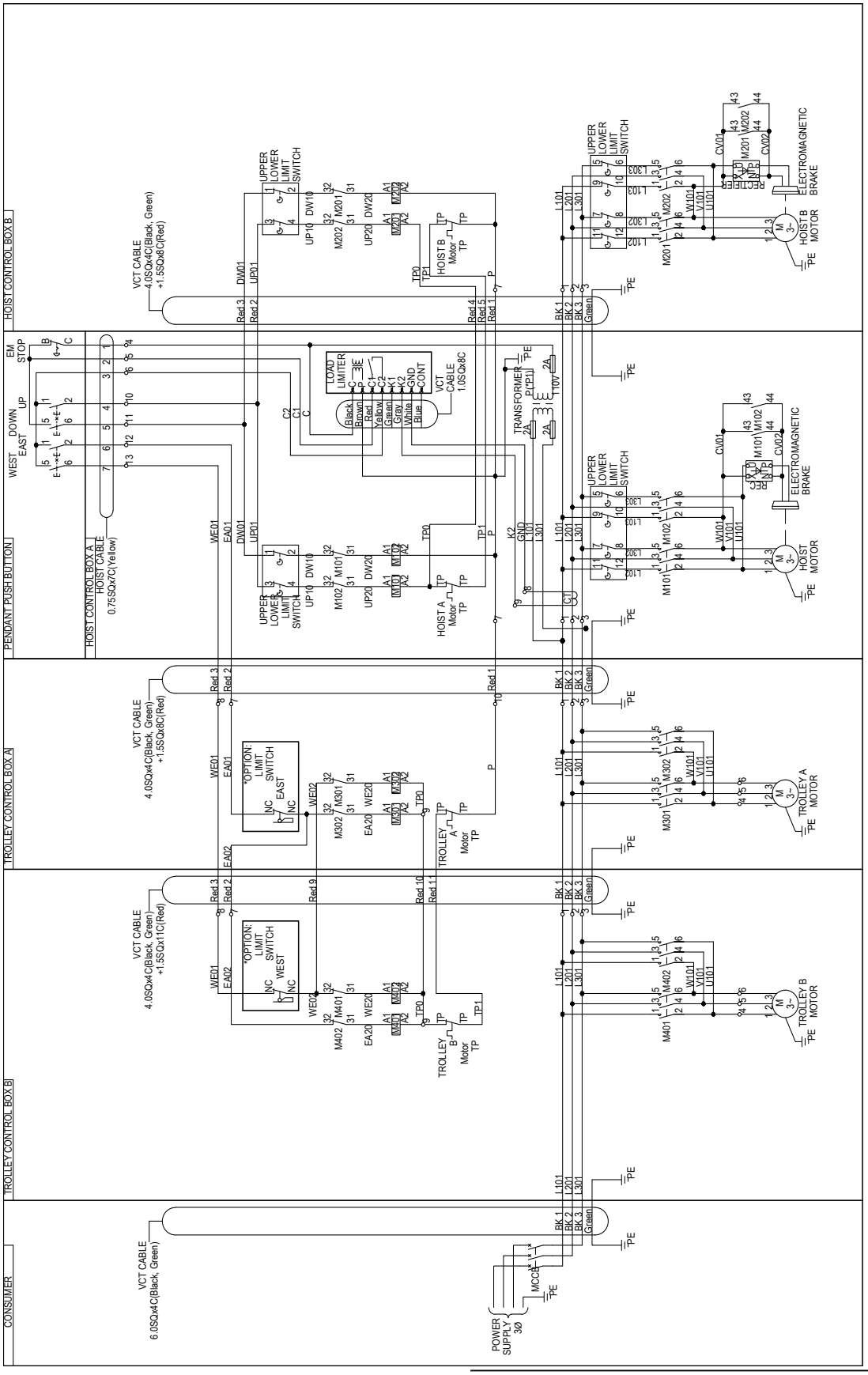

Electric Wiring Diagram of Hook Suspension Series

EDSA-10W

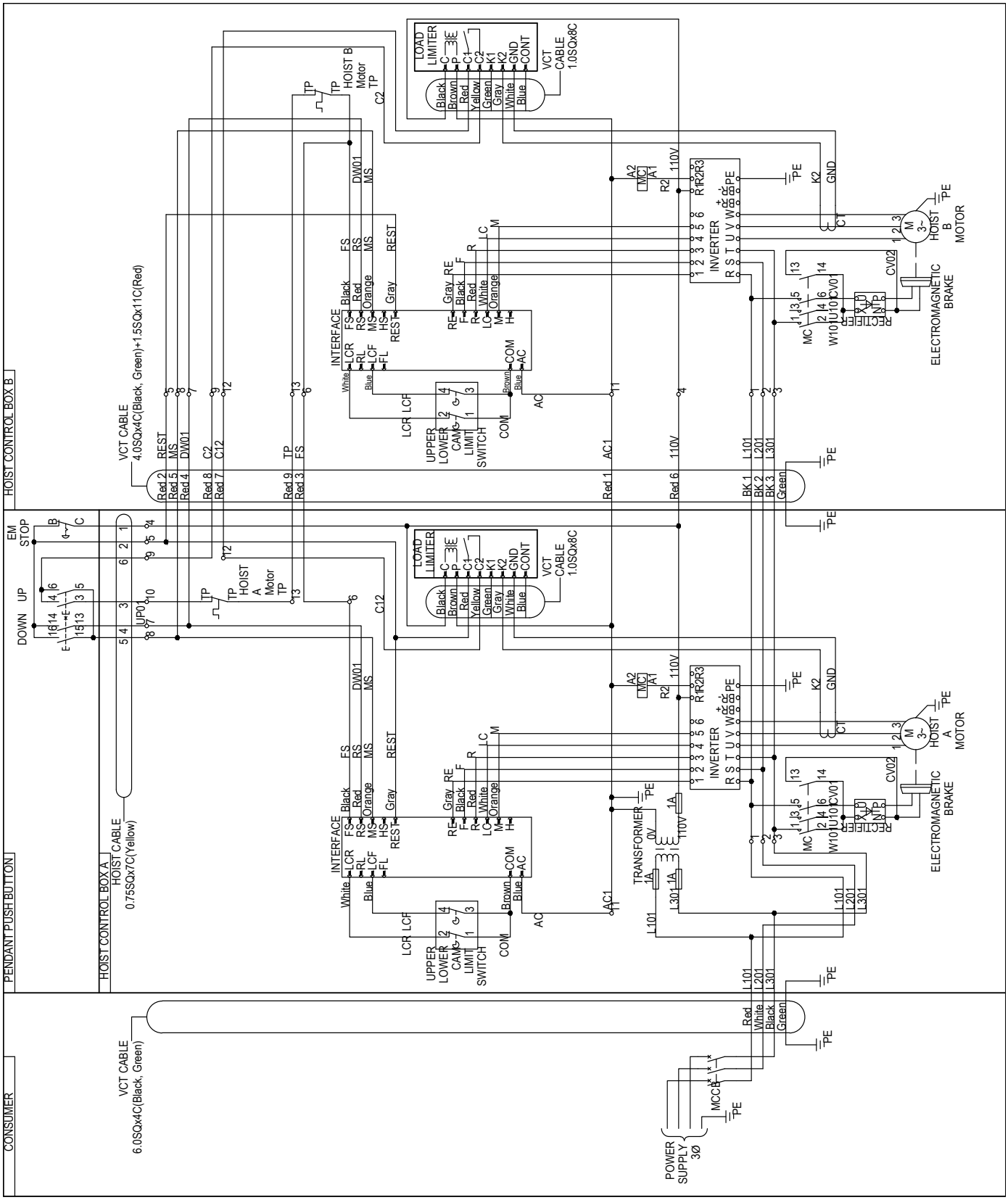

Electric Wiring Diagram of Motorized Trolley

EDSM-10W

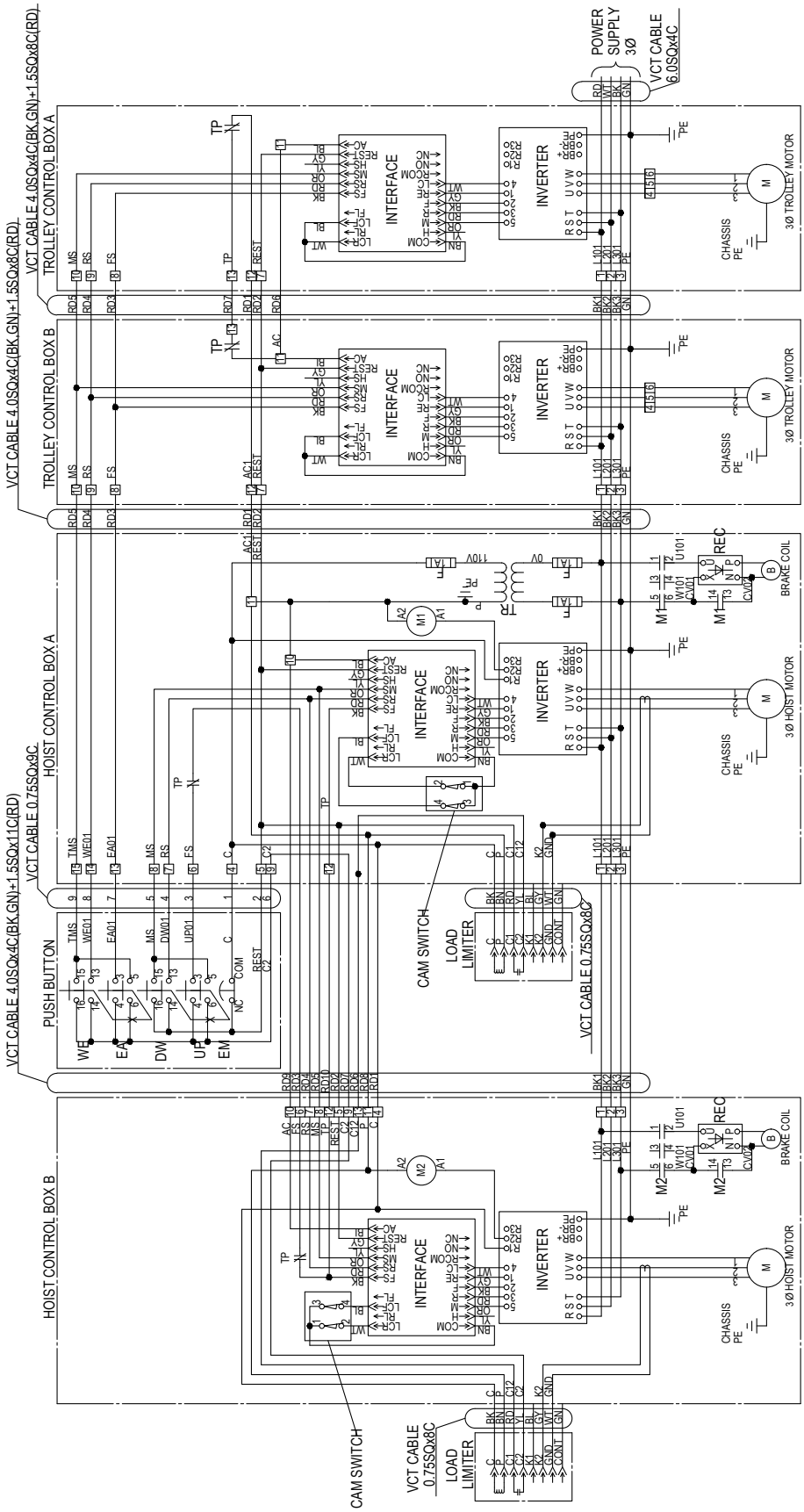

DSDH-1S,2W

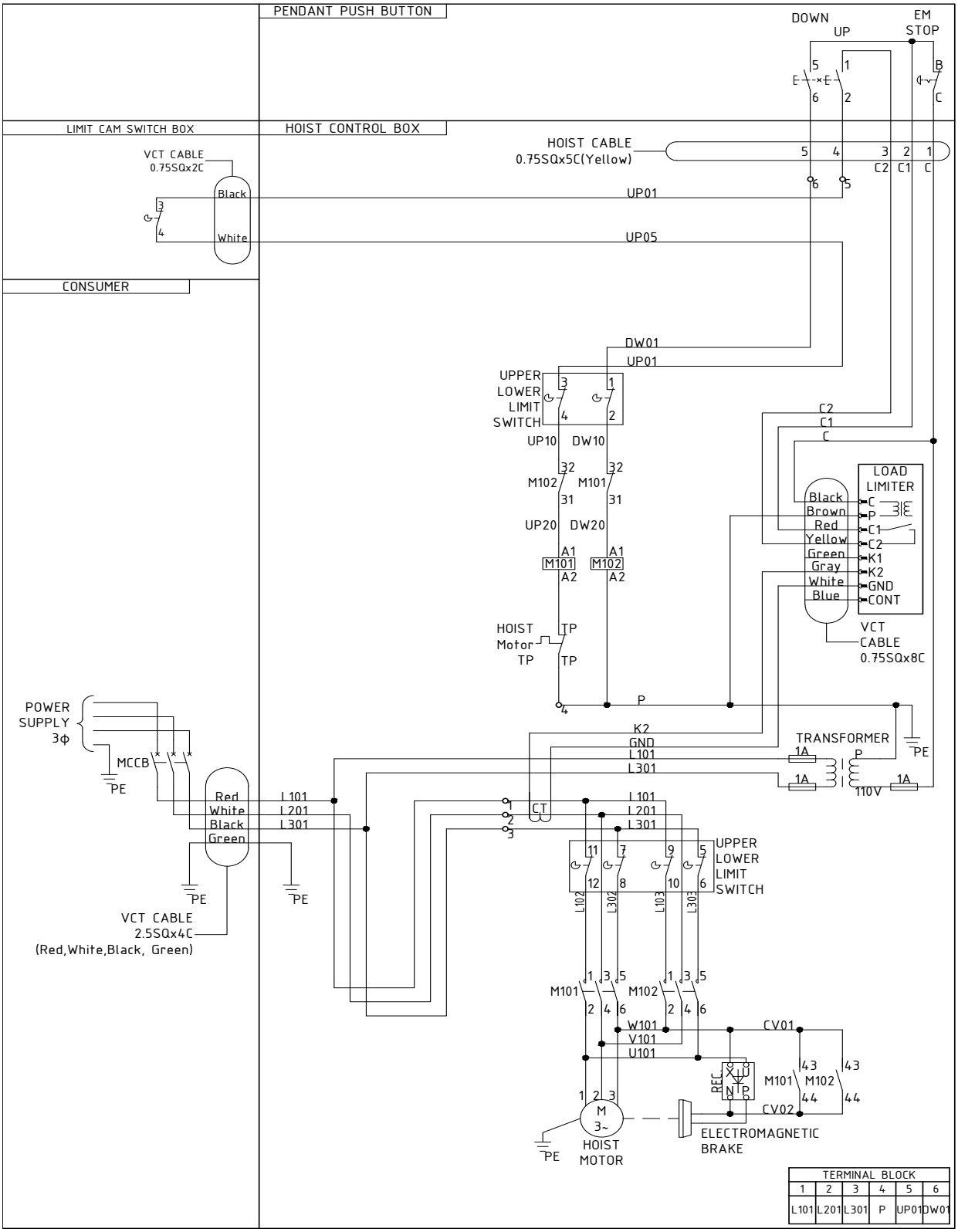
PENDANT PUSH BUTTON
DOWN
UP
EM STOP
LIMIT CAM SWITCH BOX
HOIST CONTROL BOX
VCT CABLE 0.75SQx2C
Black
White
HOIST CABLE 0.75SQx5C(Yellow)
UP01
UP05
CONSUMER
DW01
UP01
UPPER LOWER LIMIT SWITCH
UP10
DW10
M102
M101
UP20
DW20
HOIST Motor TP
LOAD LIMITER
Black
Brown
Red
Yellow
Green
Gray
White
Blue
VCT CABLE 0.75SQx8C
POWER SUPPLY 3φ
MCCB
PE
Red
White
Black
Green
L101
L201
L301
VCT CABLE 2.5SQx4C (Red,White,Black, Green)
K2
GND
CONT
TRANSFORMER
110V
CT
UPPER LOWER LIMIT SWITCH
L102
L302
L103
L303
W101
V101
U101
CV01
CV02
REC
ELECTROMAGNETIC BRAKE
HOIST MOTOR
TERMINAL BLOCK
1 2 3 4 5 6
L101 L201 L301 P UP01 DW01

DSDH-1.5S, 2S, 2.5S, 3S,

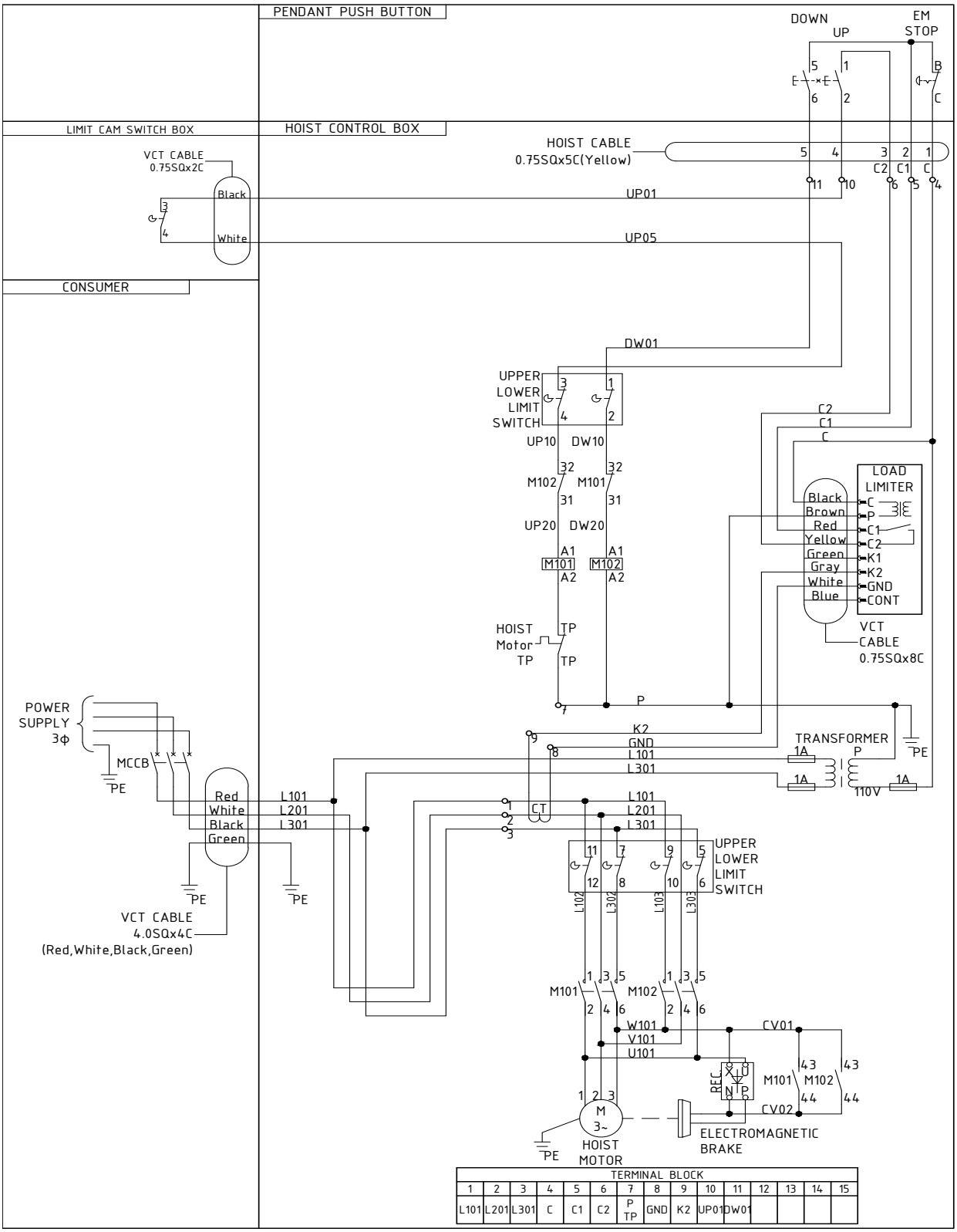

EDSDH-1S, 2W

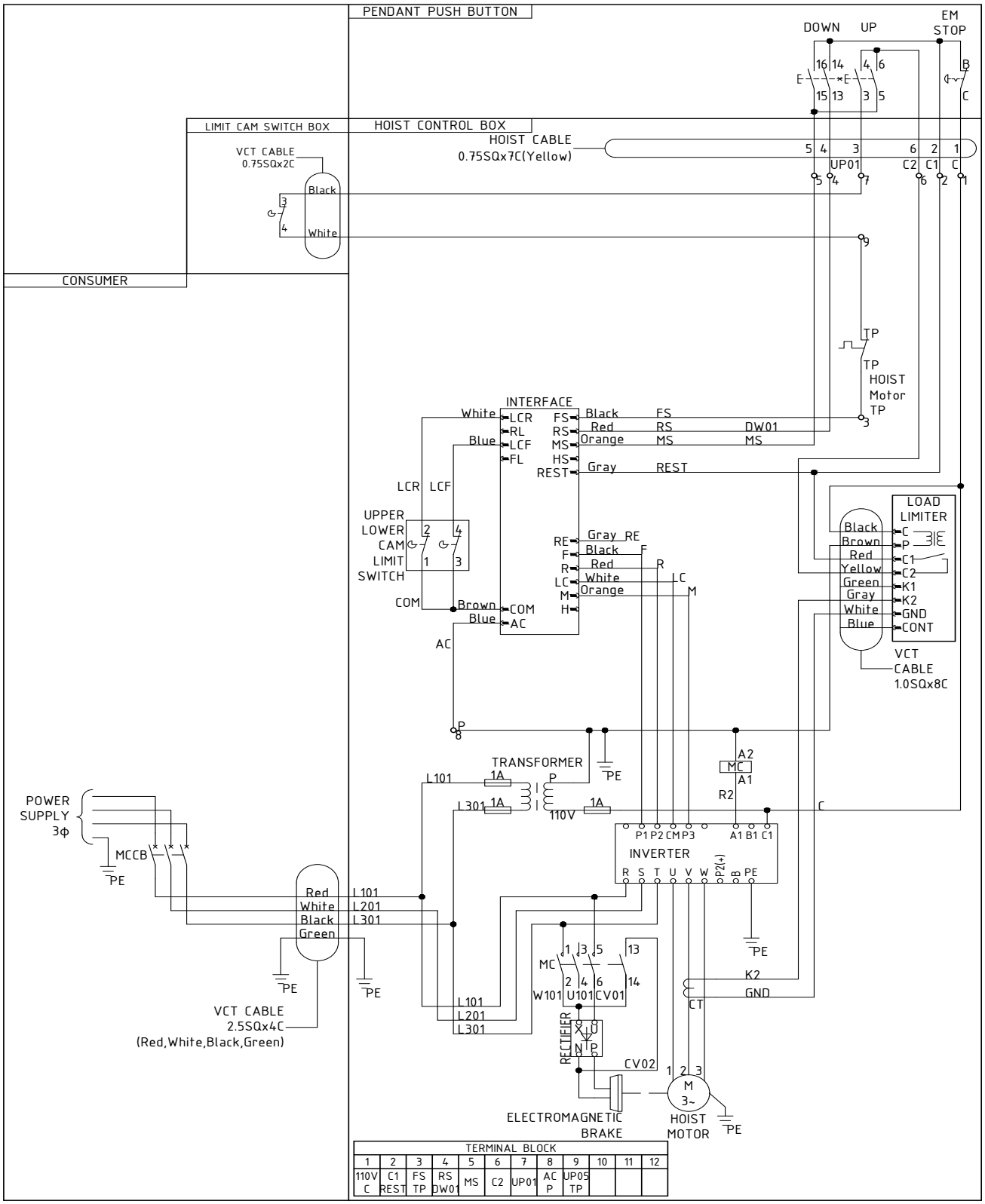
PENDANT PUSH BUTTON
DOWN
UP
EM STOP
LIMIT CAM SWITCH BOX
HOIST CONTROL BOX
HOIST CABLE
0.75SQx7C(Yellow)
VCT CABLE
0.75SQx2C
Black
White
CONSUMER
TP
HOIST Motor
INTERFACE
LCR
RL
LCF
FL
FS
RS
MS
HS
REST
Black
Red
Orange
Gray
DW01
UPPER
LOWER
CAM
LIMIT
SWITCH
COM
AC
Brown
Blue
LOAD LIMITER
Yellow
Green
GND
CONT
VCT CABLE
1.0SQx8C
TRANSFORMER
L101
L301
1A
110V
PE
MC
A2
A1
R2
POWER SUPPLY 3φ
MCCB
INVERTER
P1 P2 CM P3
A1 B1 C1
R S T U V W P2(+) B PE
Red
White
Black
Green
L201
VCT CABLE
2.5SQx4C
(Red,White,Black,Green)
W101
U101
CV01
RECTIFIER
CV02
K2
CT
ELECTROMAGNETIC BRAKE
HOIST MOTOR
M 3~
TERMINAL BLOCK
1 2 3 4 5 6 7 8 9 10 11 12
110V C
C1 REST
FS TP
RS DW01
MS
C2
UP01
AC P
UP05 TP

EDSDH-1.5S, 2S, 2.5S, 3S, 3W, 5W

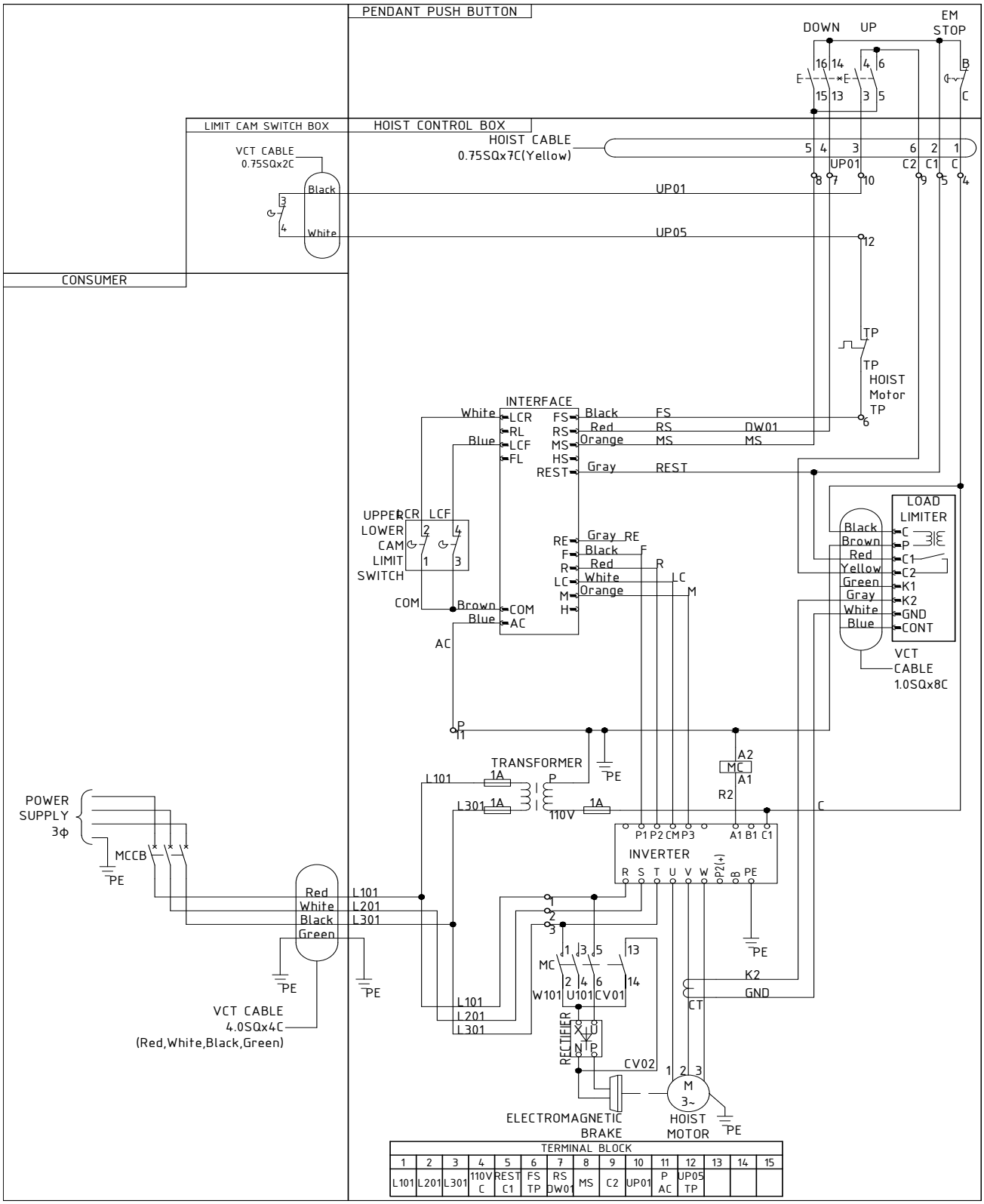

DSDHM-1S,2W

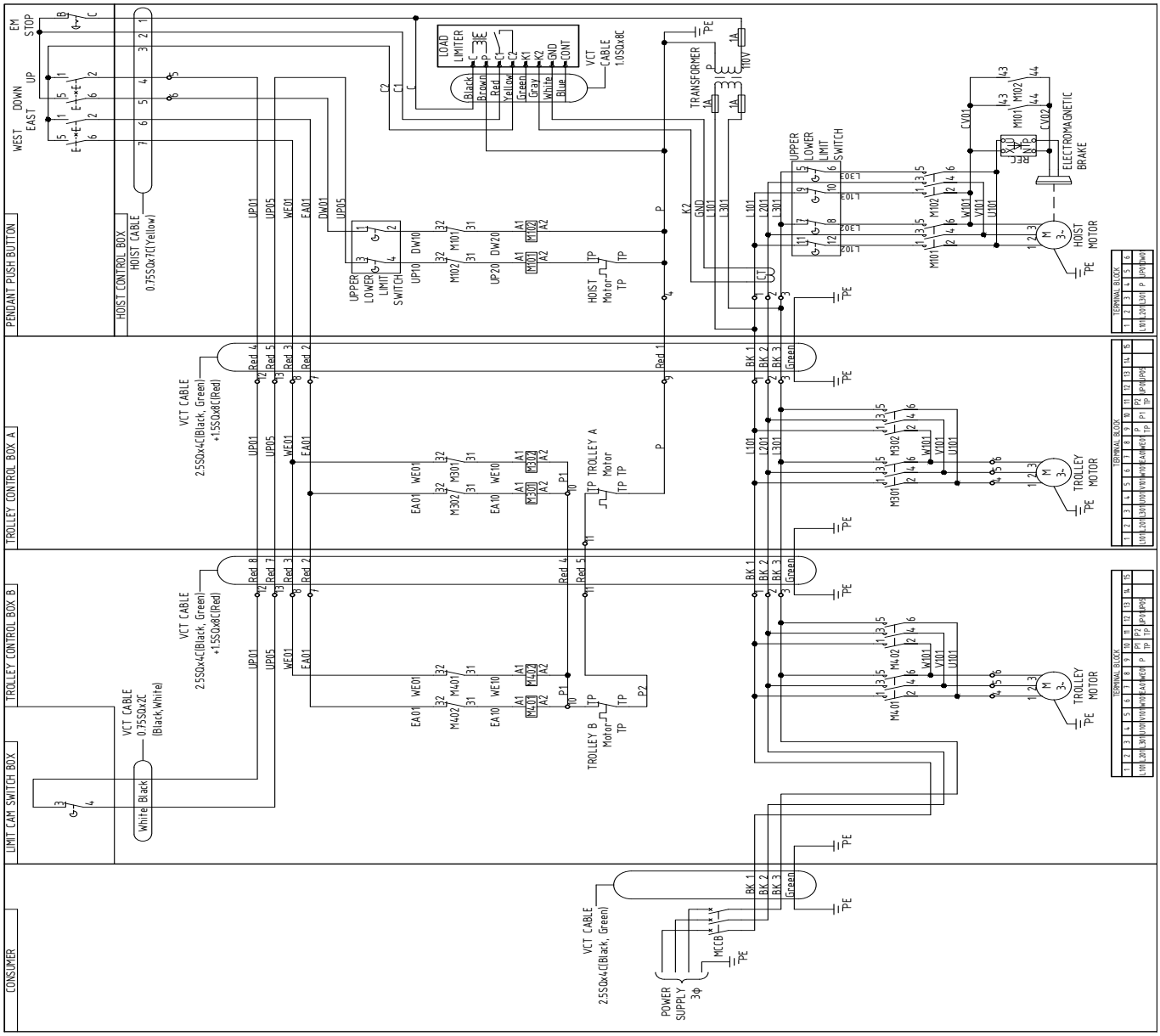
PENDANT PUSH BUTTON
TROLLEY CONTROL BOX A
TROLLEY CONTROL BOX B
LIMIT CAM SWITCH BOX
CONSUMER
EM STOP
DOWN
UP
WEST
EAST
HOIST CONTROL BOX
HOIST CABLE
0.75SQx7C(Yellow)
LOAD LIMITER
VCT CABLE 1.0SQx8C
TRANSFORMER
UPPER LOWER LIMIT SWITCH
HOIST Motor
ELECTROMAGNETIC BRAKE
HOIST MOTOR
VCT CABLE 2.5SQx4C(Black, Green) +1.5SQx8C(Red)
TROLLEY A Motor
TROLLEY MOTOR
TROLLEY B Motor
VCT CABLE 0.75SQx2C (Black,White)
VCT CABLE 2.5SQx4C(Black, Green)
POWER SUPPLY 3φ
MCCB
TERMINAL BLOCK

DSDHM-1.5S, 2S, 2.5S, 3S, 3W, 5W

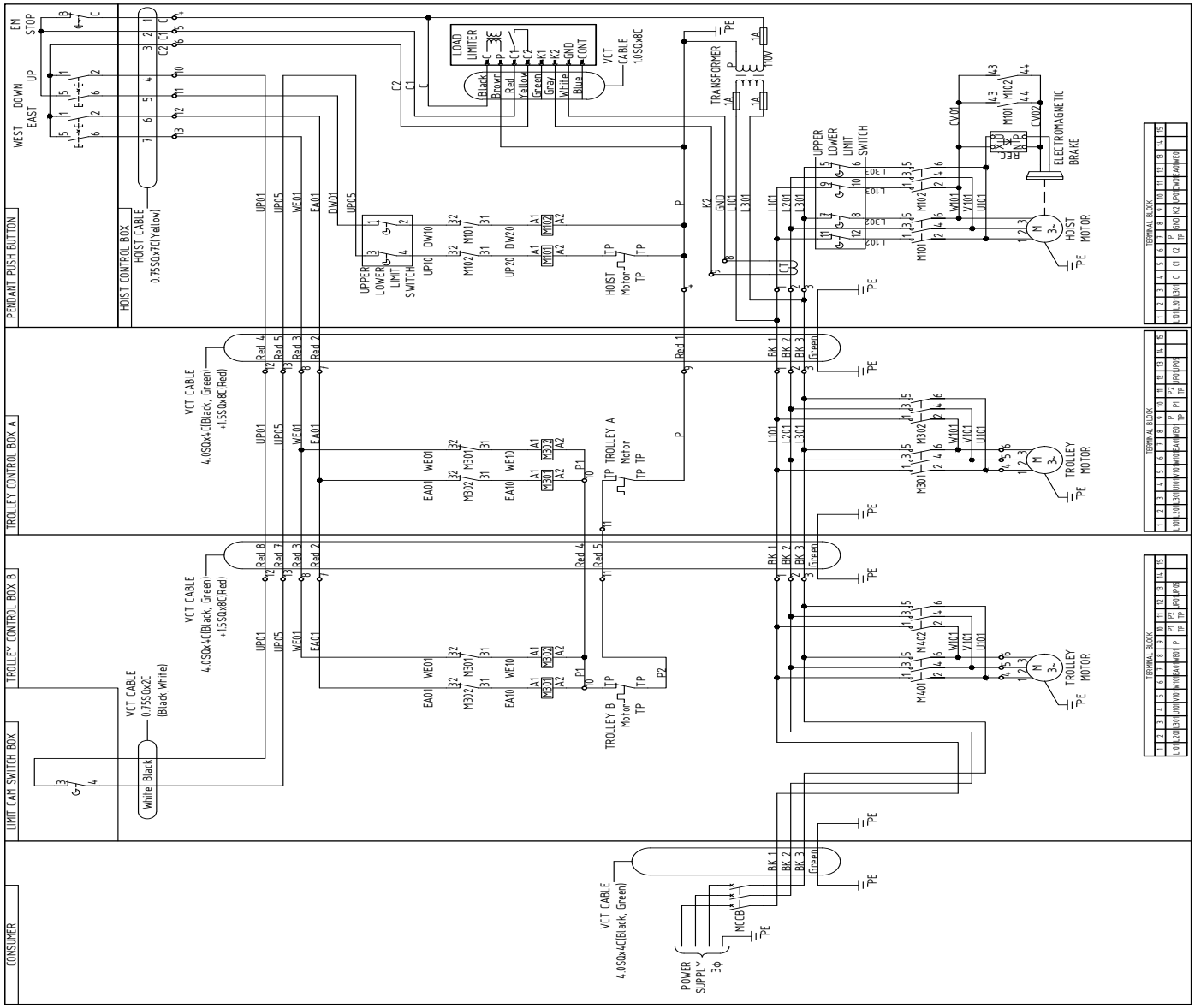

EDSDHM-1S, 2W

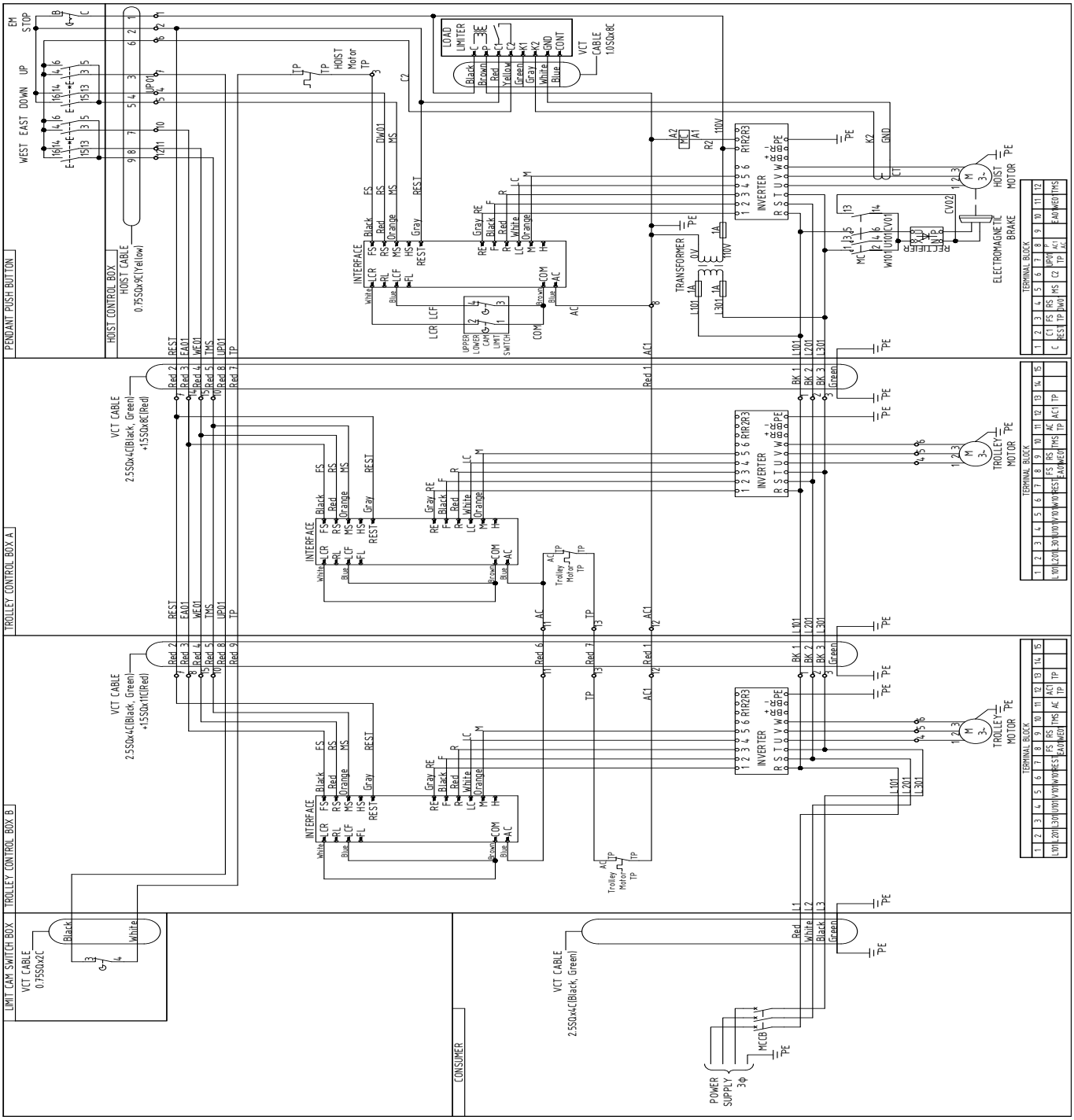
PENDANT PUSH BUTTON
HOIST CONTROL BOX
TROLLEY CONTROL BOX A
TROLLEY CONTROL BOX B
LIMIT CAM SWITCH BOX
CONSUMER
EM STOP
WEST
EAST
DOWN
UP
HOIST CABLE
0.75SQx9C(Yellow)
VCT CABLE
2.5SQx4C(Black, Green)
+1.5SQx8C(Red)
VCT CABLE
2.5SQx4C(Black, Green)
+1.5SQx1C(Red)
VCT CABLE
0.75SQx2C
VCT CABLE
2.5SQx4C(Black, Green)
LOAD LIMITER
VCT CABLE 1.0SQx8C
INTERFACE
TRANSFORMER
INVERTER
RECTIFIER
ELECTROMAGNETIC BRAKE
HOIST MOTOR
TROLLEY MOTOR
TERMINAL BLOCK
UPPER LOWER LIMIT SWITCH
POWER SUPPLY 3Φ
MCCB

EDSDHM-1.5S, 2S, 2.5S, 3S, 3W, 5W

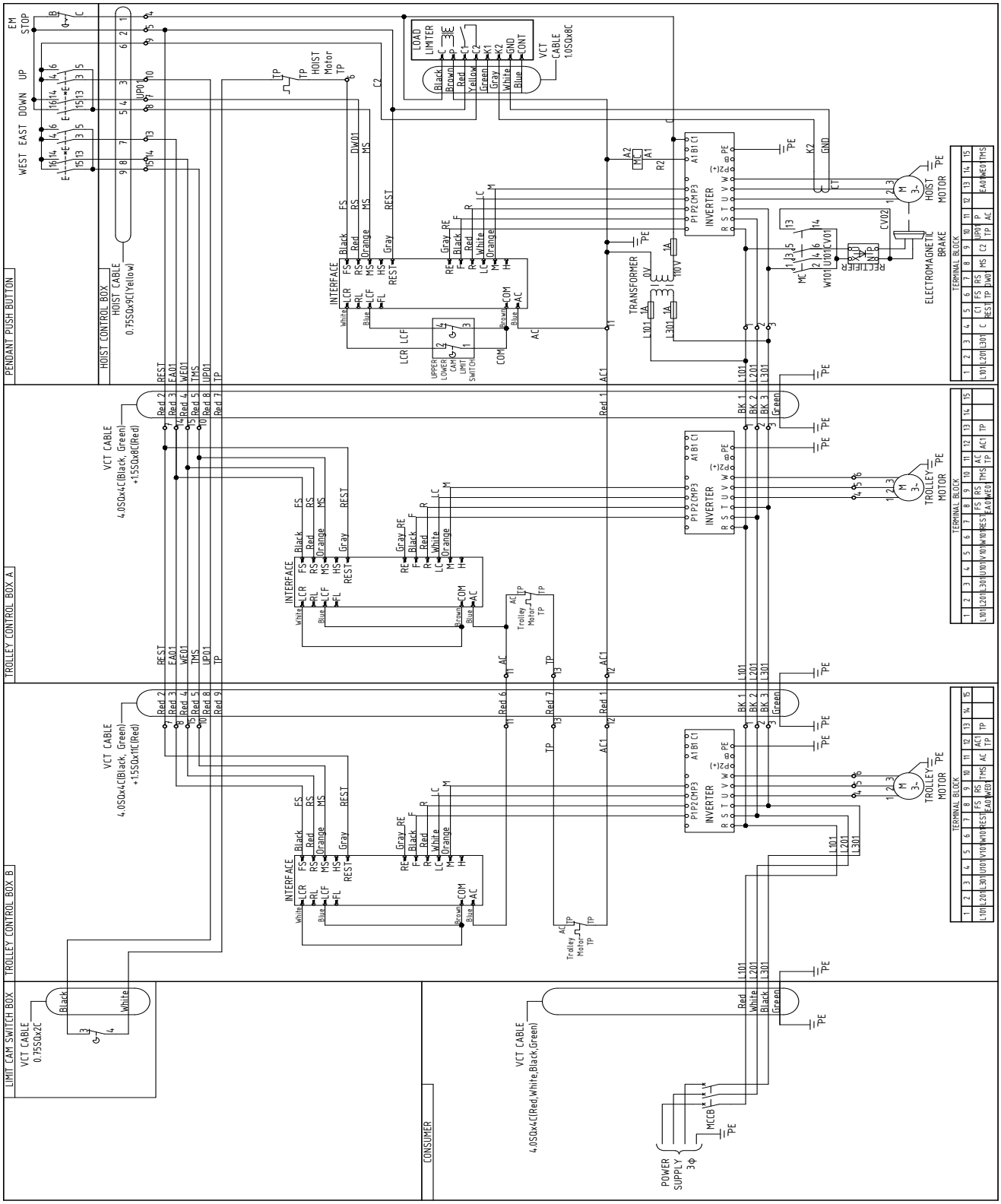

DSHM,DSHUM-1S,2W

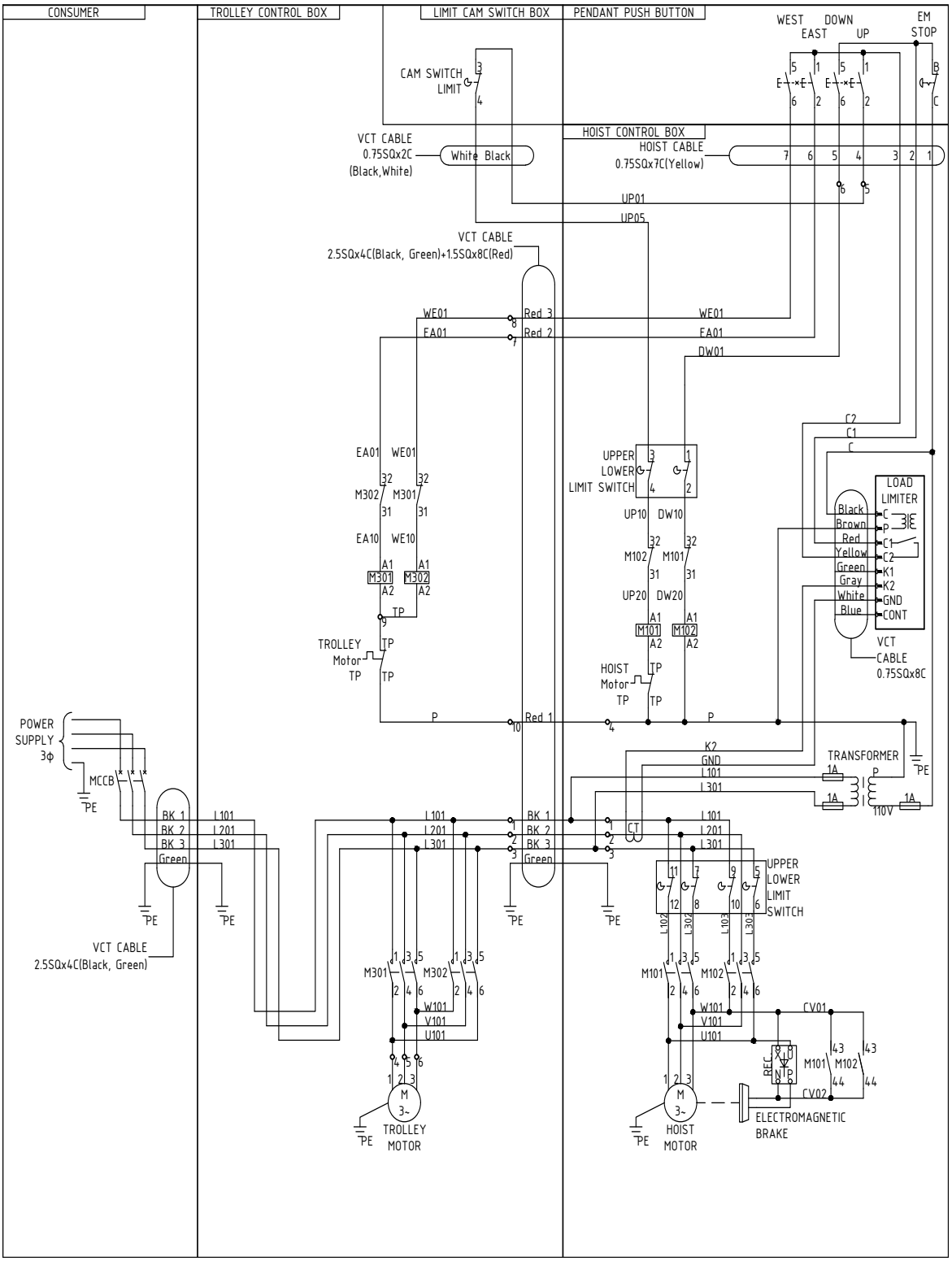

DSHM,DSHUM-1.5S,2S,2.5S,3S,3W,5W

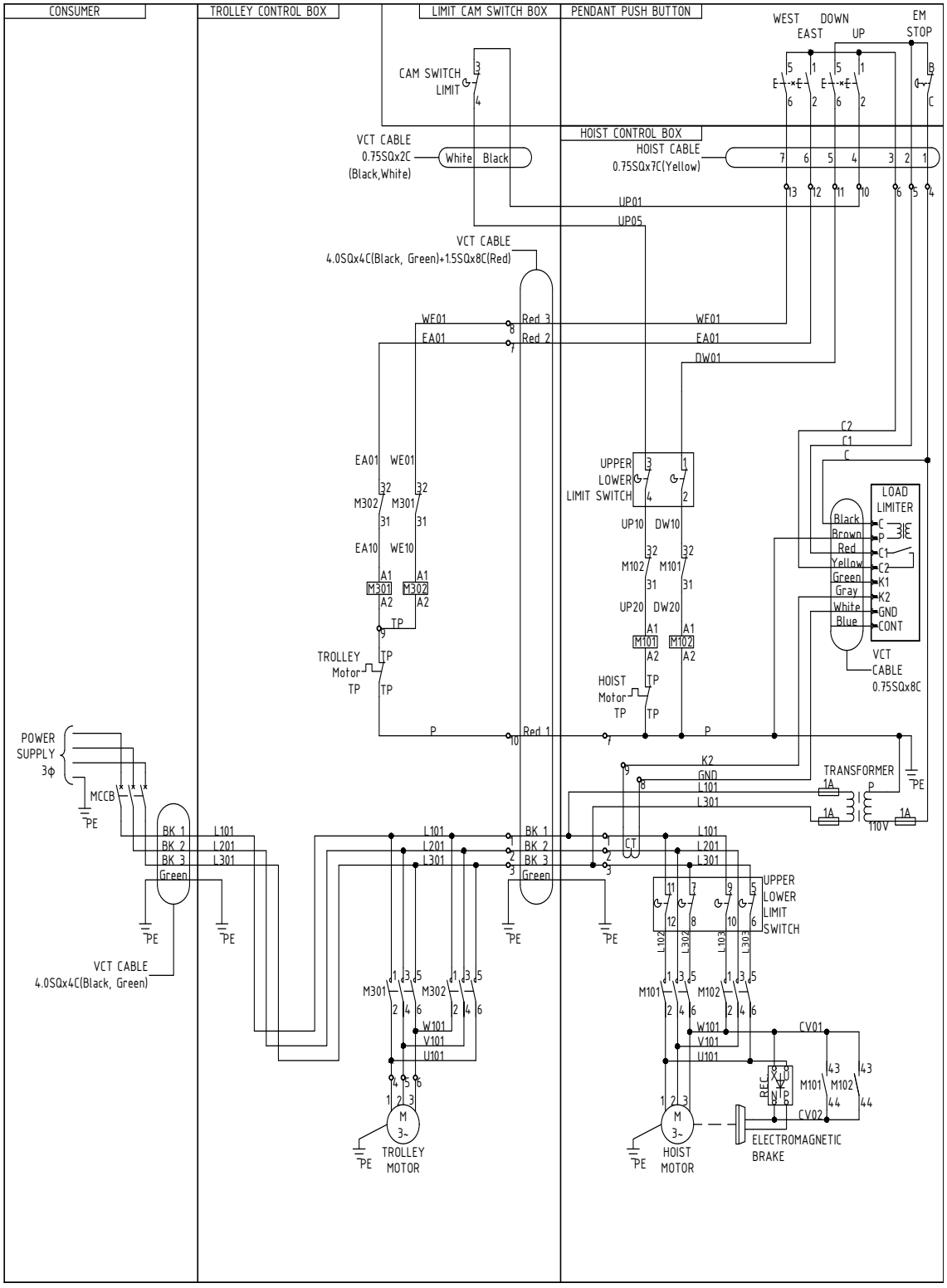

EDSHM,EDSHUM-1S,2W

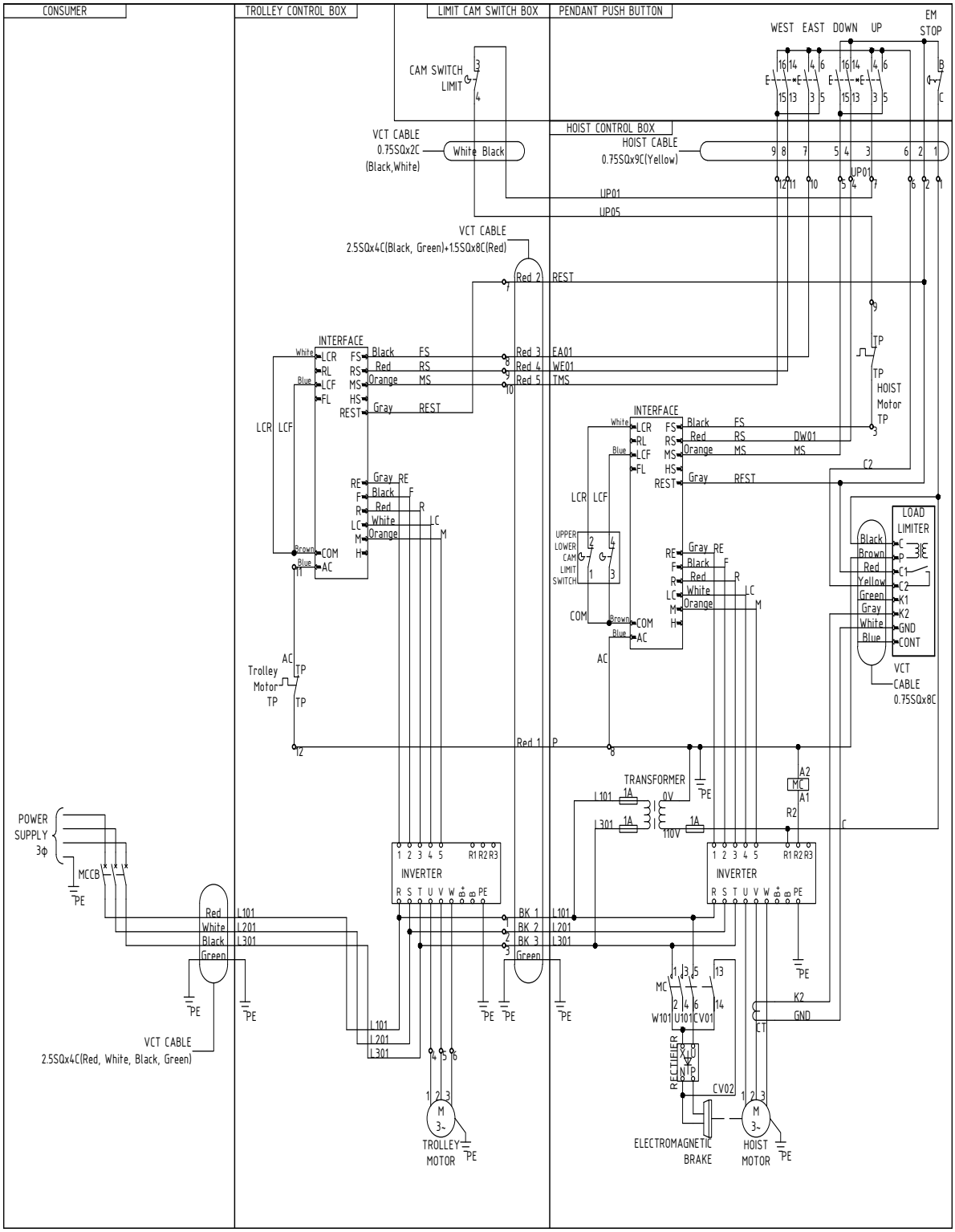

EDSHM,EDSHUM-1.5S,2S,2.5S,3S,3W,5W

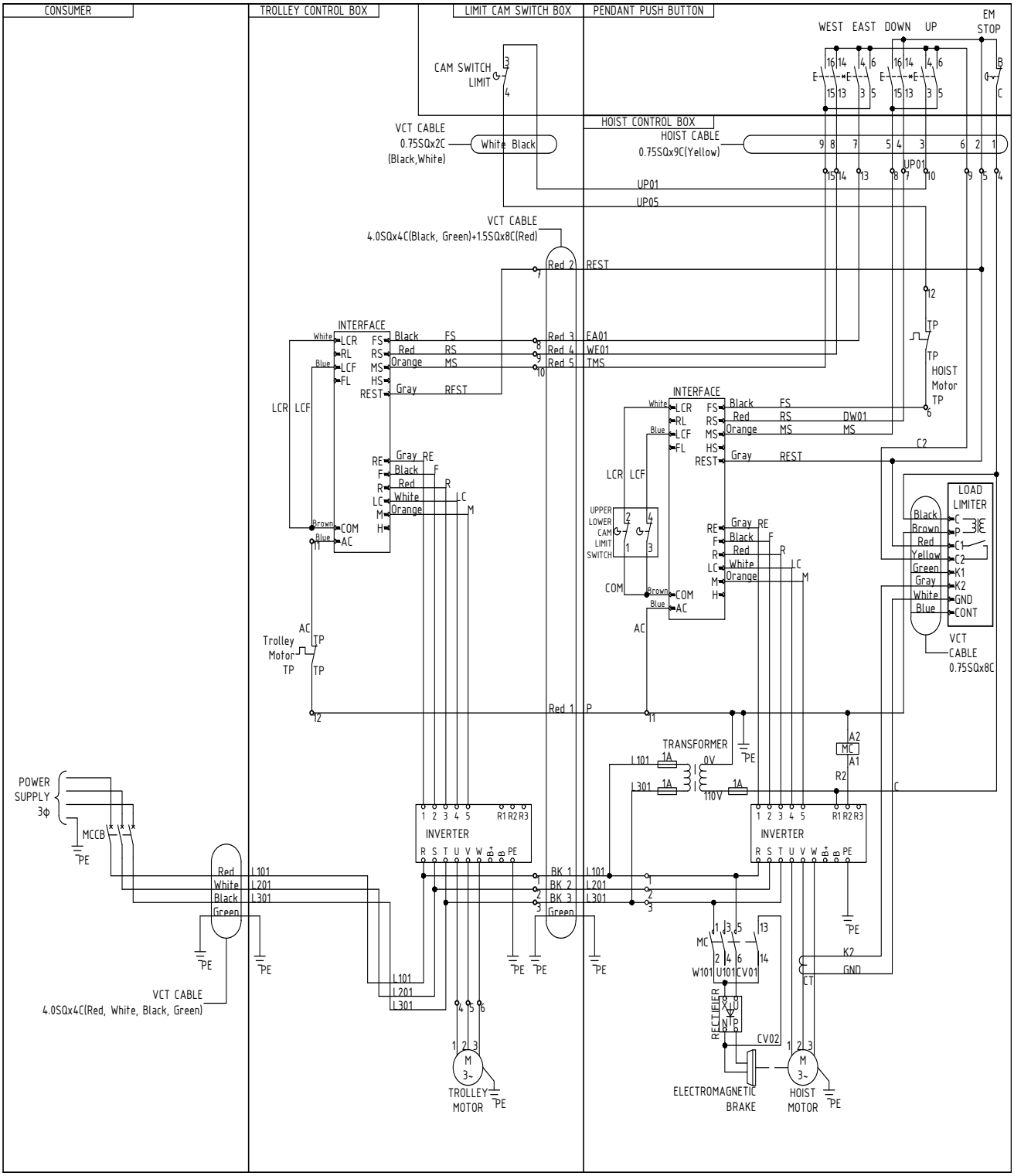

DAESAN®

GENERAL CONDITIONS OF WARRANTY

WARRANTIES : The seller warrants to the original using Buyer thereof the goods sold under this agreement free from defects in workmanship and materials for a period of one year from the date of shipment to the original using Buyer. No other express warranties are given and no affirmation of Seller or Seller's agents, by word or action, shall constitute a warranty. No warranty is made for components and accessories made by others when such items are warranted by their respective manufacturers.
Installation or operation of the equipment in any manner other than as recommended by Seller, shall void the warranty.

Any variations in details between the goods furnished herein and those covered in Buyer's specifications are due to standards of manufacture not to be construed as exceptions to the specifications.

DISCLAMER OF IMPLIED WARRANTIES :

(a) SELLER MAKES NO WARRANTY OF MERCHANTABLITY IN RESPECT TO THE GOODS SOLD UNDER THIS AGREEMENT.

(b) This sale is made WITHOUT ANY WARRANTY BY SELLER THAT THE GOODS ARE SUITABLE FOR ANY PARTICULAR PURPOSE.

(c) Buyer hereby waives all other warranties, guarantees, obligations, liabilities, rights and remedies arising by law or otherwise including any obligation or liability of the Seller arising from tort, and Buyer shall indemnify Seller from any liability, loss damage, or claim arising from Buyer's tortuous use of t he goods sold hereby.

REMEDIES :

(a) Under no conditions shall any goods be returned to Seller without its prior written consent.

(b) The Buyer's sole and exclusive remedy for breach of any warranty is limited to Seller furnishing, at its expense, duplicate or repaired parts F.O.B Seller's plant with installation at Buyer's expense if discovery of a claimed defects occurs during the allowable warranty period, and if Seller's inspection determines a defect exists.

(c) The quantity of material shown by invoice shall in all cases govern settlement for shortages, unless notice of shortage, appropriately documented, is given to the carrier and the Seller upon delivery by the Carrier.

(d) Claims for errors, deficiencies or imperfections shall be deemed waived by the Buyer unless Seller is notified in writing of the basis of such claims within 10days after discovery of claimed defect and such discovery occurs within the warranted period.

(e) Neither Buyer nor User shall be entitled under this Agreement to recover from Seller any incidental or consequential damages of any nature including but not limited to the cost of any labor expended by others in connection with the goods sold hereby by reason of any alleged nonconformity or breach of warranty on the part of the Seller, nor costs of material or account thereof, nor any lost profits whether determinable or speculative.

DAESAN®
www.daesaninotec.com

DAESAN INOTEC INC
32 32, Nonggongdangigil, Jungahn myun, Gongju Si
Chungcheongnamdo, Republic of Korea
swkang@daesanhoist.com | ygnam@daesanhoist.com | msjeong@daesanhoist.com